Strojniški vestnik - Journal of Mechanical Engineering 51(2005)6, 330-345
UDK - UDC 621.98.04:539.375
Pregledni znanstveni članek - Review scientific paper (1.02)

Nova metoda za določevanje krivulje mejnih deformacij v digitalnem okolju

An Improved Method for Determining a Forming Limit Diagram in the Digital Environment

Aleš Petek - Tomaž Pepelnjak - Karl Kuzman

Deformacijske meje pločevine, opredeljene z lokalizacijo in trganjem materiala, so pomemben parameter pri analizi preoblikovalnih postopkov. Meje dopustnih deformacij pločevine pri različnih deformacijskih stanjih najbolje prikažemo v diagramu mejnih deformacij. Za preizkusno določitev diagrama so potrebni obsežni in dragi preizkusi. Alternativna metoda za določitev krivulje mejnih deformacij (KMD) je analiza trganja materiala z numeričnimi simulacijami.

V prispevku je predstavljena metoda določevanja krivulje mejnih deformacij za celotno področje. Z uporabo programskega paketa ABAQUS je bila izvedena simulacija MKE po Marciniaku preizkusa vroče cinkane jeklene pločevine. Opisan je kriterij za določitev KMD z numerično simulacijo in na koncu še primerjava numerično in preizkusno dobljene KMD.

(Ključne besede: preoblikovanje pločevine, krivulje mejnih deformacij, metode končnih elementov, simuliranje numerično)

The deformation limits of sheet metals, which are determined with localization and fracture, represent an important parameter for the analyses of sheet-metal forming processes. The forming limits of sheet metal are represented by a forming limit diagram (FLD), which shows the various deformation states. For an experimental determination of a FLD extensive and expensive tests are necessary. An alternative method for determining the forming limit curve (FLC) is an analysis performed using numerical simulations.

This paper introduces a method for determining the forming limit curve for the whole range of the FLD for sheet metal. A simulation of the Marciniak test with the finite element method (FEM) was performed for hot-galvanized steel using the ABAQUS program. The criterion for determining the FLD with a numerical simulation is presented. Finally, the numerically obtained forming limit curve is compared with an experimental curve.

(Keywords: sheet metal forming, forming limit curves, finite element methods, numerical simulations)

0 UVOD

Krivulja mejnih deformacij (KMD) pločevine predstavlja mejo, do katere lahko določen material preoblikujemo – deformiramo, ne da bi pri tem prišlo do porušitve. Opredelimo jo v odvisnosti od dveh glavnih plastičnih deformacij φ_1 (večja na ravnini pločevine) in φ_2 (manjša na ravnini pločevine), kakor prikazuje slika 1.

V industrijski praksi nas velikokrat zanima, kako bo potekal preoblikovalni postopek, kje so kritična področja – možnost porušitev in napak.

0 INTRODUCTION

The forming limit curve (FLC) for sheet metal indicates the point to which a material can be formed before cracks occur on the specimen. The curve is defined as a correlation between the first principal strain φ_1, which is major in the plane of the sheet metal, and the second principal strain φ_2, which is minor in the plane of the sheet metal (Figure 1).

In industrial practice it is often important how the forming process is performed; it is necessary to define where the critical areas of necking and

Zaradi prihranka časa in stroškov je nujno potrebno analizirati tehnologijo preoblikovanja še preden izdelamo orodja in izvedemo preizkuse. V ta namen se v zadnjem času vse bolj uporabljajo sodobne numerične simulacije, ki v t. i. “računalniškem okolju” prikažejo potek preoblikovalnega postopka. Če ugotovimo, do katere meje lahko preoblikujemo določen izdelek, lahko postopek optimiramo, s tem prihranimo čas, znižamo stroške in izboljšamo kakovost.

Začetek analize mejne deformacije izhaja iz leta 1940. Prvi diagram, ki je bil podoben tipičnemu diagramu mejnih deformacij (DMD), je objavil Gansamer leta 1946, kot opisujeta Geiger in Merklein [1]. Leta 1965 je Keeler [2] razvil zasnovo DMD, kakor je poznana dandanes. Keeler je s preizkusi ugotovil, da je krivuljo mejne deformljivosti za pločevino mogoče prikazati v koordinatnem sistemu dveh glavnih deformacij, vendar le za področje $\varphi_2>0$. Ob koncu 60. let je to zamisel razširil Goodwin [3], ki je dopolnil diagram za območje $\varphi_2<0$. Zadnjih 40 let je diagram mejnih deformacij vzbudil pomemben vtis na raziskovalne ustanove in industrijo predvsem pri vprašanju, kako določiti največje deformacije pri katerih še ne bo prišlo do porušitve materiala med preoblikovanjem. Zaradi povečane uporabe numeričnih simulacij pločevinskih postopkov, ki so posledica razvoja zmogljivejših računalniških sistemov, je bil razvoj na področju KMD še bolj pospešen.

Razvoj določevanja KMD je usmerjen v tri glavna področja: teoretično, preizkusno in numerično določevanje.

fracture are. The forming technology can be analysed before the tool is manufactured, which leads to savings in costs and time. For this purpose numerical simulations have recently been used to show the course of the forming process in a ‘digital environment’. If the forming limit for a particular product is known the process can be optimized. In this way time is saved, costs are reduced and the quality of products is improved.

The analysis of forming limits began in the 1940s. The first diagram, which was similar to the typical FLD, was published by Gansamer in 1946, as was described by Geiger and Merklein [1]. In 1965 Keeler [2] developed the concept of the nowadays known FLD. By using experiments Keeler realised that it was possible to show a FLC for a sheet metal in a coordinate system of two main strains, but only for the right-hand side of the contemporary known FLD ($\varphi_2>0$). This idea was extended by Goodwin [3] at the end of the 1960s when the diagram was completed for left-hand side with deformations of $\varphi_2<0$. Over the past 40 years, the concept of the forming limit diagram has created a significant impact in both academia and industry on how we determine the maximum deformation that a material can withstand, without necking or tearing, during a sheet metal process. Since the enhanced use of numerical simulations in the sheet metal forming stimulated due to the immense increase in computer power, the necessity on research work in the field of FLD has also intensified.

The development of determining FLDs is oriented in three main fields: theoretical, experimental and numerical determination.

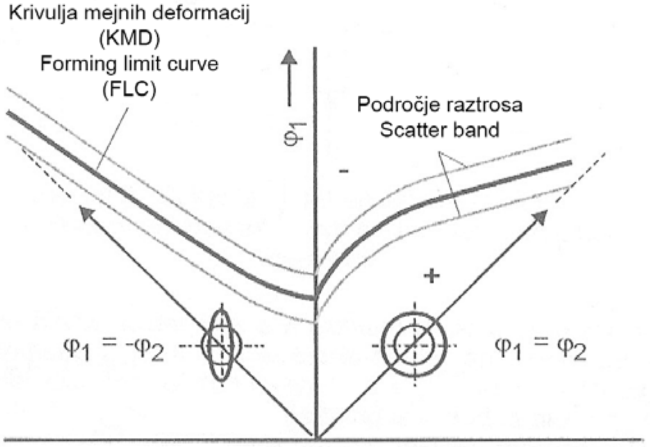

Sl. 1. *Diagram mejnih deformacij (Hašek) [1]*
Fig. 1. *Forming limit diagram (according to Hašek) [1]*

Po razvoju zamisli diagrama (Keeler [2], Goodwin [3]) se je raziskovanje preoblikovalnosti materiala usmerilo predvsem na razvoj matematičnih modelov za teoretično določevanje krivulje mejnih deformacij. Prva, ki sta predlagala kriterij lokalizacije na tanki pločevini za ravninsko napetostno stanje, sta bila Hill [4] in Swift [5]. Njuna analiza napove lokalizirano plastično deformacijo v področju $\varphi_2<0$, pri čemer je model temeljil na homogenih lastnostih pločevine. Prvi matematični model za teoretično določevanje krivulje, ki temelji na nehomogeni pločevini z vidika geometrije in sestave, sta razvila Marciniak in Kuzinsky, in je danes bolje poznan kot model M-K [6]. Eden najboljših teoretičnih modelov, ki se zelo dobro ujema s preizkusnimi podatki, je na konferenci IDDRG predstavil Cayssials leta 1998 [7]. Zaradi velike natančnosti se Cayssials model uporablja v sodobnih računalniških programih za analizo preoblikovanja pločevine v digitalnem okolju.

Zgoraj omenjeni teoretični modeli so zelo zapleteni in zahtevajo temeljito predznanje mehanike in matematike. Izračunane KMD žal niso vedno primerljive z preizkusnimi rezultati, zato so v zadnjih letih razvili tudi delno empirične modele. Prvi avtor delno empiričnega modela je bil Keeler.

Potreba po zmanjšanju obsežnega analitičnega izračunavanja in možnosti hitrega določevanja KMD tudi v industrijskem okolju je privedla do proučevanja natančnosti in učinkovitosti opredelitve krivulj mejnih deformacij s preizkusi [8]. Za določitev različnih deformacijskih stanj so bile med preoblikovalnim postopkom zahtevane različne geometrijske oblike orodja. Predstavljene so bile posebne metode za določitev različnih napetostnih stanj z eno geometrijsko obliko orodja in različno oblikovanimi preizkušanci.

Prvo široko uporabljeno metodo je leta 1971 predlagal Nakazima [9], ki je za določitev vseh deformacijskih stanj na DMD uporabljal eno orodje. Uporabljeno je bilo preoblikovalno orodje, sestavljeno iz polkrožnega pestiča, matrice in držala. Za določitev različnih deformacijskih stanj so uporabljeni pravokotni preizkušanci različnih širin. Slaba stran te metode je merjenje deformacij na polkrožnem preizkušancu, za kar sta potrebni najmanj dve kameri.

Leta 1973 je Marciniak [10] predstavil podobno metodo za določevanje KMD (sl. 2). V nasprotju s prejšnjo metodo ostaja pri Marciniakovem preizkusu analizirano področje med

After the evolution of the concept of FLDs (Keeler [2], Goodwin [3]), the research on material formability was focused mainly on the development of mathematical models for theoretical determination of FLDs. Hill [4] and Swift [5] were the first to propose a general criterion for localized necking in thin sheets under a plane stress state. Their analyses predicted localized plastic deformation in the negative minor strain region ($\varphi_2<0$). The model assumed homogeneity of the sheet metal. Marciniak and Kuzinsky have proposed the first realistic mathematical model for a theoretical determination of FLDs taking into account the non-homogeneous material behaviour of the analysed sheet metals from the geometrical and structural points of view. This model is nowadays known as the M-K model [6]. One of the best theoretical model, which fits to the experimental data, was introduced by Cayssials at the IDDRG conference in 1998 [7]. Because of its high precision the majority of computer programs use the Cayssials model for sheet-metal analyses in the digital environment.

The above-mentioned theoretical models are rather complex and need a profound knowledge of the continuum mechanism and mathematics. Theoretically calculated FLCs are not always in agreement with the experimental data. Therefore, some semi-empirical models have been developed. The first author of a semi-empirical model was Keeler.

The necessity to reduce the extensive analytical calculations and the possibility of a fast determination of the FLC in the industrial environment led to a study of the precision and efficiency of definition of the FLC with experiments [8]. To obtain various strain states during the forming process dissimilar tool geometries are required. Special methods for determining different stress states with only one tool geometry and various shaped tests are proposed.

The first widely applied method was introduced by Nakazima in 1971 [9]. He used a single tool to determine all the strain states of the FLD. The tool composed of a hemispherical punch, a die and a blank holder. Rectangular test pieces with various widths for a definition different deformation states are used. The drawback of this method is the necessity for at least two cameras for strain measurements on the hemispherical test piece.

A similar method for determining FLCs (Figure 2) was introduced by Marciniak in 1973 [10]. In contrast to Nakazima method the investigated region in the Marciniak test remains flat during the experiment.

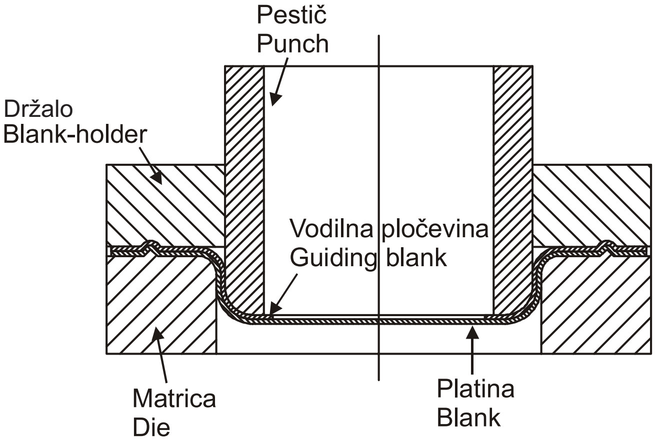

Sl. 2. *Orodje Marciniak metode*
Fig. 2. *Tool for the Marciniak method*

preoblikovanjem ravno. Merjenje deformacij lahko, zaradi 2D - problema, izvedemo z eno kamero, kar je bistvena prednost te metode. Zaradi možnosti nastanka porušitve preizkušanca na polmeru pestiča uporabljamo vodilni obroč, ki takšno trganje prepreči. Uspešnost metode je odvisna od natančne geometrijske oblike vodilnega obroča in trenja med preizkušancem in vodilno pločevino.

Za analizo deformacij pločevine potrebujemo pri obeh metodah na površini analiziranega preizkušanca natisnjeno mrežo. Deformacija mreže je bila včasih merjena s posebnimi mikroskopi, medtem ko se v novejšem času uporabljajo optični merilni sistemi s CCD kamerami.

Geiger in Merklein sta na vsakoletnem srečanju CIRP leta 2003 predstavila zanimivo zamisel o povezavi med lokalizacijo in gradientom glavne deformacije [1] pri Nakazima metodi.

Poleg zgoraj omenjenih metod določevanja KMD je bilo v zadnjih desetih letih predstavljenih še veliko drugih metod, kakor so enoosni natezni preizkus, s katerim lahko določimo KMD le za področje $\varphi_2<0$, hidravličen izbočitveni test, Keeler test, Hecker test, Hašek test in druge [11].

V zadnjih letih se zaradi potrebe po zmanjšanju stroškov in številu preizkusov za določevanje KMD vse več uporabljajo simulacije MKE. Brun [12] predstavlja zamisel o analizi lokalizacije z drugim odvodom debeline po času z Nakazima metodo, medtem ko Ozturk analizira trganje materiala s kriterijem žilave porušitve na isti preizkusni metodi [13].

Področje lokalizacije in kasneje zloma na preizkušancu je z uporabo numerične simulacije težko

Therefore, because this case is a 2D-application, strains can be measured with only one camera, an important advantage of this method. Due to the danger of fracture, which can appear outside the observed specimen area, a guiding blank is used. This prevents such a failure. The effectiveness of this method depends on the geometrical precision of the guiding blank and the friction between the test piece and the guiding blank.

The deformation analysis in both methods requires a grid system printed on sheet-metal surface. Originally, the deformed grids were measured with special microscopes, but nowadays optical measuring systems with CCD cameras are used.

At the annual CIRP meeting in 2003 an idea about the correlation between the materials' necking and the gradient of major strain versus time during the Nakazima method was presented by Geiger and Merklein [1].

In addition to the above-mentioned methods for determining the FLC, many other methods were introduced in the past ten years, e.g., the uniaxial tensile test, which defines only the left part of the FLD ($\varphi_2<0$); the hydraulic bulge test; the Keeler test; the Hecker test; and the Hašek test [11].

In recent years demands on cost reduction and decreased number of tests necessary for definition of the FLC have intensified the use of finite-element simulations. Brun [12] introduced the idea that the onset of necking can be predicted by the second time derivative of thinning by the Nakazima method, whereas Ozturk analysed the material failure using the ductile fracture criteria applied in the same test [13].

The onset of necking and the subsequent fracture of the specimen are hard to predict with napovedati. V prispevku je predstavljen inovativen postopek o iskanju kriterija za rešitev zgoraj omenjenega problema.

Različna deformacijska stanja v pločevini dosežemo z različnimi preizkusi. V praksi želimo uporabiti čim manj preizkusnih orodij, zato želimo KMD izdelati s preizkusi, pri katerih se spreminja oblika preizkušanca in ne oblika orodja. Iz omenjenega razloga smo tako pri preizkusnem, kakor pri numeričnem določanju KMD uporabili Marciniakov izbočitveni preizkus.

Tipični popis diagrama mejnih deformacij se izvede s štirimi različnimi deformacijskimi stanji (globoki vlek, natezni preizkus, enoosno deformacijsko stanje in enakomerno izbočevanje), pri katerih v dani pločevini povzročimo lokalno stisnjenje in nato porušitev materiala. Pojav začetka lokalnega stisnjenja se šteje kot indikator porušitve preoblikovalnega postopka za pločevino. V tem trenutku se na kritičnem območju preizkušanca pojavijo deformacije, ki definirajo točke krivulje mejnih deformacij na diagramu φ_1 v odvisnosti od φ_2. Deformacijo na mestu porušitve pri preizkušanju izmerimo z uporabo grafometrične analize ([8] in [14]). Analiza temelji na ugotavljanju velikosti in smeri deformacij na posameznem območju pločevine na osnovi spremembe koordinatne merilne mreže, ki jo pred preoblikovanjem nanesemo na preizkušanec. Pri numeričnem določanju pa deformacijo na mestu porušitve določimo z uporabo algoritma, opisanega v tem prispevku.

1 OPIS NUMERIČNEGA MODELA

Model za simulacijo Marciniakovega preizkusa je sestavljen iz togih delov orodja, kakor so valjasto oblikovan pestič z ravnim poglobljenim čelom, zgornja plošča (držalo) in spodaj odprta matrica z zavorno letvijo in deformljivih delov, kakršna sta preizkušanec in vodilni obroč (sl. 3). Pri Marciniakovi metodi uporabljamo že omenjen vodilni obroč, prikazan na sliki 3, ki preprečuje nastanek največjih deformacij preizkušanca v bližini polmera pestiča. Ta obroč se deformira skupaj s preizkušancem, pri čemer premesti deformacije preizkušanca iz polmera pestiča na ravno površino pod pestičem. Geometrijska oblika orodja je bila izbrana glede na objave tujih raziskav.

Marciniakov preizkus zahteva uporabo različnih geometrijskih oblik preizkušancev za določitev različnih deformacijskih stanj in napetosti. Simulacijski postopek je potekal na sedmih

numerical simulations. This paper presents an innovative approach to finding alternative criteria to solve the above-described problem.

Different strain states in sheet metal are reached with various tests. In practice it is desirable to minimise the number of used forming tools. We want to define the FLC using tests where the specimens' shapes change and the tool geometry remains unchanged. For this reason the Marciniak test was selected for the experimental as well as for the numerical determination of the FLC.

A typical description of the FLD is executed with four characteristic deformation states (deep drawing, uniaxial tension, uniform tension and biaxial balanced stretch forming), by which the localization and the subsequent material fracture in the sheet metal is caused. The onset of necking is considered as a fracture indicator of the forming process for sheet metal. At this point limit strains on the critical area of the specimen appear, which define the points for the limit curve on the diagram φ_1 versus φ_2. Deformation, where the fracture occurs, is measured using graphometric analyses ([8] and [14]). This analysis is based on size and direction investigation of the major strains of the particular sheet metal area by changing the coordinate measure grid, which is printed on the specimens before the forming process. However, with a numerical simulation the fracture strain is determined using the methodology described in this paper.

1 DESCRIPTION OF THE FINITE-ELEMENT MODEL

The finite-element model for the Marciniak test consists of rigid tool parts: a cylindrical punch with a flat bottom, a blank holder and a die with drawbead and deformable parts, like the specimen and the guiding blank (Figure 3). The guiding blank used in the Marciniak method, as shown in Figure 3, prevents the appearance of maximal strains in the vicinity of the punch radius. This blank is deformed together with the specimen and helps to reposition the critical strains from the punch radius to the flat surface under the punch. The tool geometry was chosen after consulting the publications from international research work.

The Marciniak test requires the application of various specimens' geometries for a determination of the different strain states and stresses. The simulation process was achieved with seven different

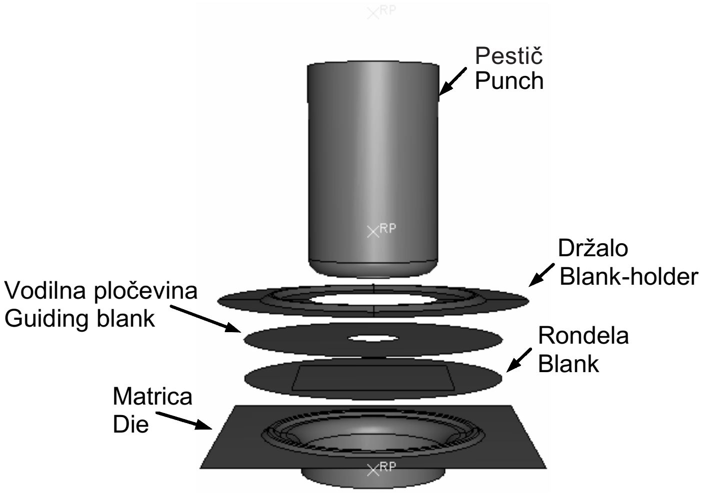

Sl. 3. *Objekti simulacije Marciniak preizkusa*
Fig. 3. *Finite element model of Marciniak test*

preizkušancih različnih oblik (sl. 4). Prvi preizkušanec ima obliko kroga premera 200 mm (rondela), preostalih šest pa ima obliko traku (platina), ki je bil izrezan iz kroga s premerom 200 mm, s širinami 165 mm, 150 mm, 135 mm, 130 mm, 95 mm in 60 mm. Vsak od vzorcev pomeni na diagramu mejnih deformacij eno specifično deformacijsko pot. Za numerično simuliranje omenjenega preoblikovalnega postopka smo uporabili programski paket ABAQUS, ki temelji na metodi končnih elementov (MKE). Izbrali smo 3D lupinske elemente z več integracijskimi točkami po debelini lupine. Zaradi velikega števila objektov simulacije, ki so v medsebojnem kontaktu, smo se v izogib kontaktnim problemom pri implicitnem načinu računanja odločili za eksplicitni način računanja.

Mehanske lastnosti preizkušanca (vroče cinkana jeklena pločevina), ki jih potrebujemo za popis elasto–plastičnega obnašanja materiala, smo dobili z neprekinjenim enoosnim nateznim preizkusom v Laboratoriju za preoblikovanje na Fakulteti za

specimen geometries (Figure 4). The first specimen is a blank with a 200 mm diameter; the other six are strip-shaped cut from the same blank with a diameter of 200 mm. The widths of the strips are 165 mm, 150 mm 135 mm, 130 mm, 95 mm and 60 mm. Each sample corresponds to a specific strain path on the FLD. For the simulations of the Marciniak method, the commercially available finite-element program ABAQUS was used. Three-dimensional shell elements with five integration points across the thickness were selected. Due to the large number of simulation objects in contact, solver convergence problems can occur during the simulation. An explicit solver was selected to alleviate this problem.

The material properties of hot-galvanized low-carbon steel necessary to define the elasto-plastic material behaviour were obtained using a uni-axial tensile test in the Forming Laboratory of the Faculty of Mechanical Engineering in Ljubljana ([15] and [16]). The stress-strain curve was approximated

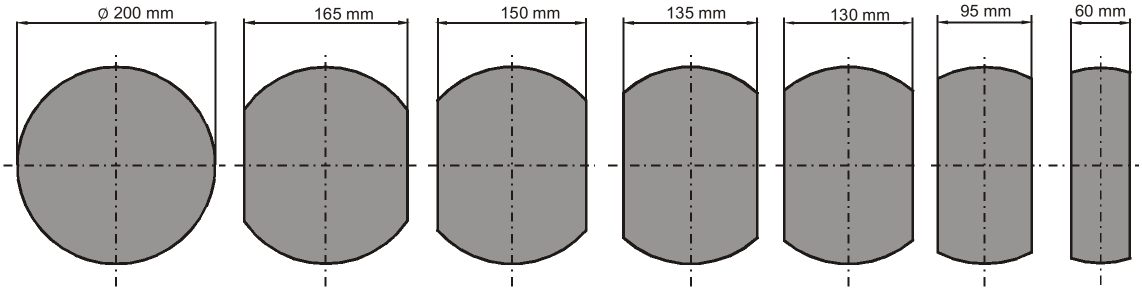

Sl. 4. *Različne oblike preizkušancev*
Fig. 4. *Different shapes of test pieces*

Preglednica 1: *Mehanske lastnosti vroče cinkane jeklene pločevine*
Table 1: *Material property of hot galvanized steel*

C = 719,2 MPa	E = 210 GPa
n = 0,153	ρ = 7850 kg/m^3
r_0 = 0,948	ν = 0,3
r_{45} = 0,793	t_0 = 0,64 mm
r_{90} = 1,003	

pri čemer so:

C…..konstanta utrjevanja materiala [MPa]
n…..eksponent utrjevanja [1]
r….. koeficient normalne anizotropije [1]
E…..modul elastičnosti [MPa]
ρ…..gostota [kg/m^3]
ν…..Poissonovo število [1]
t_0…..začetna debelina preizkušanca

where the parameters are:

C…..strength coefficient [MPa]
n…..strain hardening coefficient [1]
r…...material anisotropy [1]
E…..Young's modulus of elasticity [MPa]
ρ…..density [kg/m^3]
ν…..Poisson's ratio [1]
t_0…..initial specimen thickness

strojništvo v Ljubljani ([15] in [16]). Preračun približka krivulje plastičnosti smo izvedli po Hollomonovem potenčnem zakonu. Mehanske lastnosti so prikazane v preglednici 1.

Material je bil popisan z elasto–plastičnim snovnim zakonom. Upoštevali smo anizotropno obnašanje materiala, ki smo jo popisali s Hill-ovim kvadratičnim kriterijem tečenja. Menimo, da model MKE ni odvisen od hitrosti preoblikovanja. Simulacijski postopek je bil razdeljen na dva koraka. V prvem koraku se držalo giblje v smeri *z* in pritisne vodilno pločevino ter preizkušanec ob matrico. Zob matrice deformira material in preprečuje drsenje preoblikovanca med držalom in matrico. Matrica in pestič ostajata v tem koraku nepremična. Sila držala je med celotnim postopkom simuliranja približno 150 kN. V drugem koraku preoblikovalnega postopka se pestič giblje v smeri *z*, dokler ne doseže zahtevane oddaljenosti.

Trenje med dotikalnimi površinami posameznih delov Marciniakovega modela je definirano s Coulombovim zakonom. Vrednosti koeficientov trenja μ med posameznimi telesi simulacije v dotiku, dobljene iz preizkusov, so:

- pestič – vodilna pločevina: μ = 0,08,
- držalo – vodilna pločevina: μ = 0,25,
- vodilna pločevina – preizkušanec: μ = 0,3,
- preizkušanec – zob matrice: μ = 0,25,
- preizkušanec – polmer matrice: μ = 0,08.

by the Hollomon potential law. The material properties are shown in Table 1.

In the FE simulations the elasto–plastic material behaviour was modelled. The anisotropic material properties were considered, which were described with the Hill quadratic yield criterion. The model was assumed to be rate independent. The simulation processes were performed in two steps. In the first step the blank holder moves down in the 'z'-direction and presses the guiding blank and the sheet-metal specimen onto the die. The die drawbead deforms the material and prevents the specimen sliding between the blank holder and the die. The cylindrical punch and the die remain fixed in this step. The blank-holder force is approximately 150 kN during the whole simulation process. In the second simulation step the punch moves with a constant speed in '*z*'-direction until the prescribed displacements are achieved.

The contact interaction between the surfaces in the FE model is defined with the Coulomb friction law. The friction coefficients, μ, among the simulation objects in contact have the following values, obtained from the experiments:

- Punch – guiding blank: μ = 0.08,
- Blank holder – guiding blank: μ = 0.25,
- Guiding blank – blank: μ = 0.3,
- Blank – die drawbead: μ = 0.25,
- Blank – die radius: μ = 0.08.

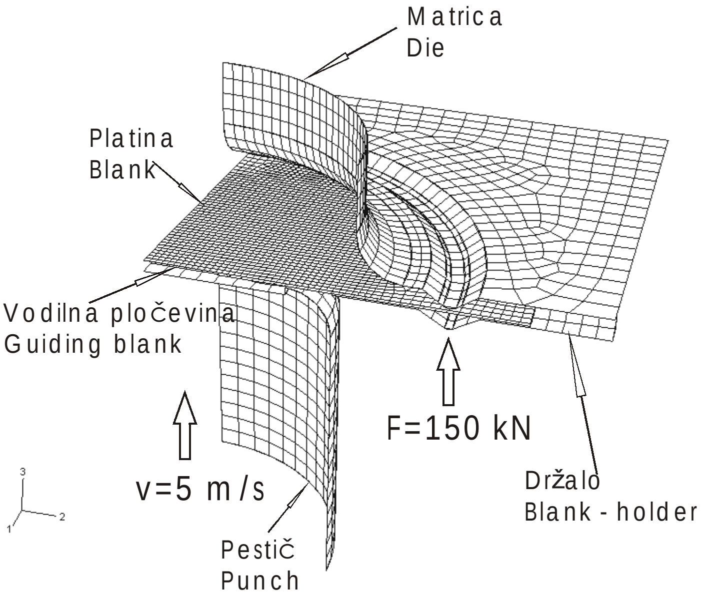

Sl. 5. *Model končnih elementov (1/4)*
Fig. 5. *Finite element model (1/4)*

Mreža in robni pogoji MKE Marciniakovega modela so prikazani na sliki 5. Posebno pozornost smo posvetili mreži preizkušanca. Zaradi pričakovanega nastanka lokalizacije oziroma zloma preizkušanca v področju pod pestičem, to področje omrežimo na zelo majhne kvadratne elemente mreže velikosti 1,5 x 1,5 mm^2. S tem zmanjšamo vpliv velikosti in oblike mreže na natančnost numerično dobljene KMD [17], medtem ko se čas računanja numerične simulacije poveča. Velikost pravokotnega področja je pri preizkušancih, širših od 120 mm, veliko 120 x 120 mm^2. Pri ožjih preizkušancih pa se to področje primerno zoži.

2 OPIS KRITERIJA ZA DOLOČEVANJE KMD

Pri analizi KMD preiskujemo nastanek lokalizacije oziroma porušitve na preizkušancu med postopkom preoblikovanja. Določiti je potrebno območje ter čas nastanka lokalizacije in kasneje porušitve. Zamisel o kriteriju za določevanje KMD z numerično simulacijo smo dobili iz teoretičnega modela Marciniaka–Kuckzinskega (M-K), ki temelji na določevanju lokalizacije na področju vnesene geometrijske napake. Kratek opis modela M-K je predstavljen v naslednjem poglavju. Prav tako je bila koristno uporabljena Geigerjeva gradientna metoda

The mesh and boundary condition of the Marciniak finite-element method are presented as one quarter of the entire model - Figure 5. Special attention was given to the specimen's mesh. Due to the expectation of localized necking and sample fracture under the punch this area was meshed with a very small squared mesh with a size of 1.5 x 1.5 mm^2. Implementing a so small grid size, the influence of the mesh size and its shape on the accuracy of the numerically obtained FLC [17] decreases; however, the calculation time of the numerical simulation increases. Specimens wider than 120 mm have a mapped mesh area of 120 x 120 mm^2. When using narrow specimens this area is correspondingly narrower.

2 METHODOLOGY DESCRIPTION FOR DETERMINATION OF THE FLC

The onset of necking or fracture of the formed specimen is investigated when the numerical FLC is analysed. The time and area of the onset of necking and subsequent fracture is defined. Several ideas about the criterion for the determination of the numerical FLC are obtained from the theoretical Marciniak–Kuckzinsky (M-K) model. The model describes the localization in the area with the inserted geometrical defect. A brief description of the M-K model is presented in the following section. Geiger's and Merklein's gradient method [1] was also

[1]. S preizkusnim postopkom je ugotovil, da se gradient deformacije med preoblikovalnim postopkom naglo spremeni v trenutku nastanka lokalizacije. Podobno zamisel o uporabi drugega odvoda deformacije debeline po času, kot kriterij lokalizacije, je v računalniškem okolju predstavil Brun [12]. Metoda napove, kdaj se pojavi lokalizacija in ni primerna za analiziranje, kje in kako se je le ta pojavila.

2.1 Kratek opis teoretičnega modela Marciniaka – Kuckzinskega

Z uporabo modela M-K analiziramo plastično nestabilnost v materialu. Pri tem upoštevamo plastični model z izotropnim utrjevanjem materiala in ravninsko napetostno stanje.

Model temelji na povečevanju začetne napake v obliki ozkega utora, nagnjenega pod kotom ψ_0 glede na os *y* (sl. 6). Začetna velikost geometrijske napake je karakterizirana z razmerjem e_0^b/e_0^a, kjer je e_0^a začetna debelina področja in e_0^b debelina utora. Osi *x*, *y* in *z* ustrezajo vzdolžni, prečni in pravokotni smeri glede na smer valjanja pločevine, medtem ko 1 in 2 predstavljata glavni osi napetosti in deformacij v homogenem področju.

Smeri na utoru so predstavljene z osmi *n*, *t*, *z*, kjer je '*t*' vzdolžna os. Obe področji materiala sta izpostavljeni plastični deformaciji, pri čemer upoštevamo stalno raztegovanje homogenega dela. Plastična deformacija se pri obremenitvi pojavi v obeh področjih. Njena velikost pa je odvisna od prečnega prereza področja. Ob dosegu kritične

found to be useful. They established with their experimental work that the strain gradient during the forming process changes rapidly at the instant when the localization occurs. A similar idea, analysed in the digital environment, about the usage of the second temporal derivation of the thickness strain as localization criteria is presented by Brun [12]. The method predicts when the onset of necking occurs but it is not suitable for analysing where and how it appears.

2.1 Brief description of theoretical Marciniak–Kuckzinsky model

The simulation of the plastic instability is performed using the M-K analysis. The rigid plasticity, the plane stress condition and the isotropic work hardening of the material are assumed.

The model is based on the growth of an initial defect in the form of a narrow band inclined at an angle ψ_0 with respect to the principle axis. The initial value of the geometrical defect is characterized by the ratio e_0^b/e_0^a, where e_0^a and e_0^b are the initial thicknesses in the homogeneous region and the groove, respectively. The *x*, *y* and *z* axes correspond to the rolling, transverse and normal directions of the sheet, whereas the 1 and 2 axes represent the principal stress and strain directions in the homogeneous region, respectively.

The set of axes bound to the groove is represented by the *n*, *t* and *z* axes, where '*t*' is oriented in the longitudinal direction. This two-zone material is subjected to plastic deformation by applying a constant incremental stretching of the homogeneous part. The plastic flow occurs in both regions, but the evolution of the strain rates is different in

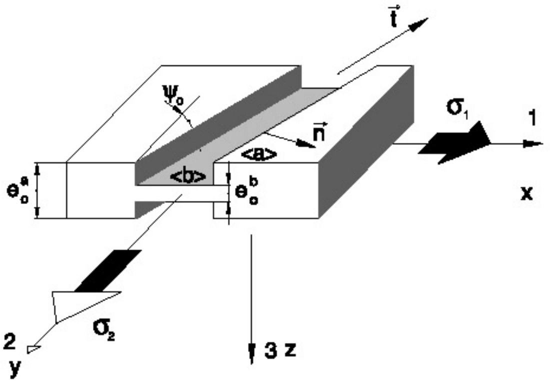

Sl. 6. *Začetna napaka M-K modela [18]*
Fig. 6. *Initial defect of the M-K model [18]*

deformacije v utoru se v njem pojavi lokalizacija. Pri tem je dosežena mejna deformacija pločevine. Za lažjo izpeljavo ravnotežnih enačb modela M-K se predpostavi, da se deformacija (φ_1) pojavi v smeri osi *x*.

Natančen opis teoretične analize M-K, shematsko prikazane na sliki 6, lahko zasledimo v različnih virih ([6],[18] do [20]).

2.2 Opis numeričnega kriterija za določitev KMD

Pri iskanju kriterija za določitev numerično dobljene krivulje mejnih deformacij smo najprej analizirali diagram preoblikovalne sile, ki ga dobimo z numerično simulacijo za vsako izmero vzorca posebej.

V splošnem prikazuje preoblikovalna sila naraščajočo pot do dosega njene največje vrednosti in nenadno zmanjšanje ob pojavu porušitve pločevine, kakor se to zgodi pri preizkusu. Pri Marciniakovi metodi uporabljamo vodilno pločevino, ki se zaradi boljših preoblikovalnih lastnosti in večje debeline poruši kasneje kakor preizkušanec. Kasnejša porušitev vodilne plošče pri simulaciji z MKE zadržuje nenadno zmanjšanje sile, ki se pojavi pri porušitvi preizkušanca. Porušitev skupine vzorcev, ki popisujejo levo stran KMD, se pojavi po celotni drsni ravnini, pri čemer se le-ti razpolovijo. Ta celoten zlom preizkušancev vpliva na pojav nenadnega zmanjšanja sile preoblikovanja kljub uporabi vodilne pločevine. Zato je mogoče pojav nenadnega zmanjšanja sile pri Marciniakovi metodi opazovati le pri preizkušancih, s katerimi popišemo levo stran KMD.

Če vrišemo deformacijsko stanje posameznih preizkušancev v trenutku, ko se preoblikovalna sila zmanjša, in če upoštevamo samo najvišje točke posameznih preizkušancev, je natančnost narisane KMD zelo majhna. Iz tega lahko sklepamo, da je preoblikovalna sila preveč splošen parameter in zato ni najbolj primerna za opredelitev meje porušitve pločevine.

Za določitev pojava lokalnega stisnjenja potrebujemo manj splošen parameter, kakor je preoblikovalna sila, ki mora biti povezan s posameznim elementom oz. vozliščem. Iz narave lokalnega stisnjenja debeline pločevine ter ob upoštevanju analize M-K, bi lahko za parameter izbrali plastično deformacijo debeline najtanjšega vozlišča.

two zones. When the flow localization occurs in the groove at a critical strain in the homogeneous region, the limiting strain of the sheet metal is reached. Furthermore, the major strain is assumed to occur along the *x* axis.

A detailed description of the theoretical M-K analysis, schematically illustrated in Figure 6, can be found in several publications ([6],[18] to [20]).

2.2 Description of the numerical criterion for the determination of the FLC

The first attempt made by an investigation of the criterion for the determination of the numerically achieved FLC was the analysis of the forming force versus time for all the simulated specimen dimensions.

The stamping force obtained by the FEM shows an increasing ranking until its maximum value is reached and abruptly decreases as soon as failure appears on the sheet, as also happens with the experiment. The guiding blank, which has better forming properties and/or greater thickness, is used by the Marciniak method and fails later than the specimen. The subsequent fracture of the guiding blank by the FEM simulation delays the sudden decrease of the forming force appearing as a result of material fracture. The fracture of all the specimens describing the left part of the forming limit diagram ($\varphi_2<0$) is appears on the whole slide plane. In these cases the samples are divided into two approximately equal parts. This specimens rupture results in a suddenly decrease in the forming force, despite the use of a guiding blank. Therefore, the appearance of an abrupt decrease of the forming force during the Marciniak method can only be seen for samples defining the left-hand side of the FLD.

If the strain state of the particular specimens at the moment when the forming force drops down is plotted, and only the highest points of several specimens are considered, the drawn FLC is not accurate enough. It can be concluded that the forming force is a too general parameter and is therefore probably not the most suitable one to describe the deformation behaviour of the sheet metal.

For the determination of the phenomenon of localized necking, a criterion related to the single node or element is needed. This is a less general parameter than the forming force. With consideration of the M-K analysis and the nature of the local contraction of sheet thickness, the plastic thickness strain of the thinnest node can be chosen. When

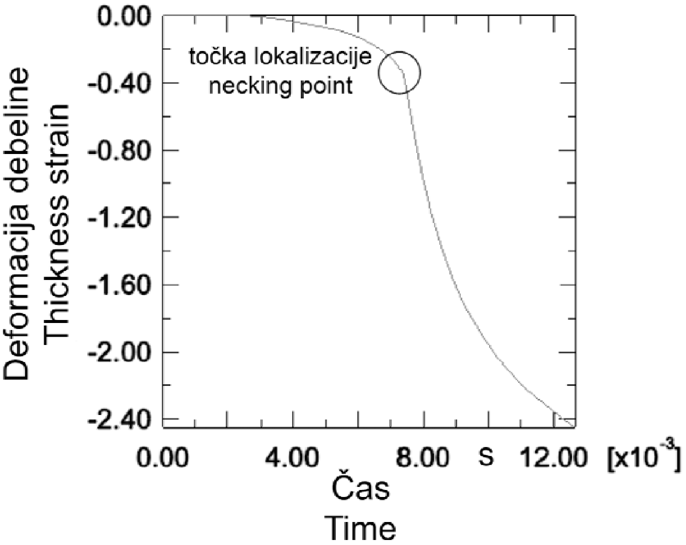

Sl. 7. *Tanjšanje najtanjšega vozlišča v odvisnosti od časa (platina 95 mm)*
Fig.7. *Thinning as a function of time for the critical node (platinum 95 mm)*

Ob pojavu lokalnega stisnjenja moramo zaznati ostro spremembo v deformacijskem obnašanju izbranega vozlišča. Na krivulji, ki prikazuje logaritemsko deformacijo v smeri debeline pločevine φ_s v odvisnosti od časa (sl. 7), vidimo koleno, ki poudarja skokovito spremembo deformacije.

Če predvidevamo, da je začetek lokalne kontrakcije povezan z značilno spremembo hitrosti deformacije debeline v odvisnosti od časa, potem ima drugi časovni odvod deformacije $\ddot{\varphi}_s(t)$ v tem trenutku največji ekstrem funkcije. Slika 8 prikazuje

necking appears, a sharp change in the strain behaviour of the selected node should be noted. On the curve which shows the true principal strain in the sheet thickness direction φ_s versus time (Figure 7), a knee can be observed. This underlines a bigger variation of strain against time.

If we consider that the onset of necking can be connected with a significant variation in the strain thickness velocity versus time, then the second temporal derivation of strain $\ddot{\varphi}_s(t)$ has at this moment maximal extreme function. The first and

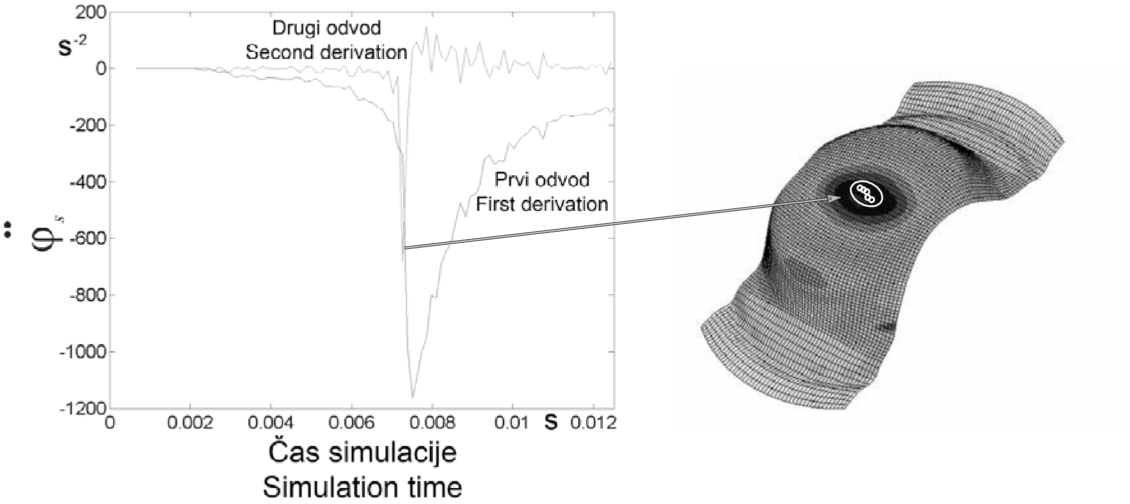

Sl. 8. *Začetek lokalizacije in njena lega na preizkušancu*
Fig. 8. *Onset of necking and its location on the analysed specimen*

prvi in drugi odvod deformacije debeline v odvisnosti od časa. Drugi odvod prikazuje lokaliziran vrh v času. V tem trenutku lahko pričakujemo pričetek lokalnega stisnjenja na vzorcu.

Ovrednotenje stanj glavnih deformacij (φ_1 in φ_2) različnih geometrijskih preizkušancev, analiziranih glede na ekstreme funkcije $\ddot{\varphi}_s(t)$ kritičnih vozlišč posameznega preizkušanca, daje točke za določitev KMD z uporabo numeričnega postopka.

2.3 Opis metodologije

Pri proučevanju kriterijev za določitev KMD z uporabo numeričnih simulacij se je kot najboljša izkazala analiza debelinske deformacije. Pri vrednotenju numerično opredeljene KMD smo uporabili sedem različnih geometrijskih oblik preizkušancev.

Uporabljena metodologija pri določanju KMD s pomočjo numeričnih simulacij je povzeta v naslednjih sedmih korakih:

1 – Iskanje najtanjšega vozlišča. Na analiziranem modelu MKE iščemo najtanjša vozlišča preizkušanca za celoten čas preoblikovanja, ki ga diskretiziramo na časovne korake t_0.

2 – Določanje deformacije debeline. Najtanjša vozlišča vseh časovnih korakov so označena in vnesena v program za MKE analize ABAQUS. Omenjenim vozliščem zapišemo pripadajoče deformacije debeline med celotnim postopkom preoblikovanja.

3 – Izračun prvega in drugega časovnega odvoda deformacije debeline. Predvidevamo, da je začetek lokalne kontrakcije povezan z značilnim povečanjem deformacije debeline v odvisnosti od časa. Skokovito spremembo φ_s najbolje prikazuje drugi časovni odvod deformacije, ki ga izračunamo in analiziramo za vsako najtanjše vozlišče. Drugi odvod deformacije opredelimo kot:

second derivatives of thickness strain versus time are shown in Figure 8. The later one represents a localized peak in time. At this moment we can expect the onset of necking in the specimen.

An evaluation of the main strain states (φ_1 and φ_2) for different specimen geometries, analysed according to the function extremes $\ddot{\varphi}_s(t)$ of the critical nodes on a particular specimen, gives the points for a determination of the FLD by a numerical approach.

2.3 Methodology description

The thickness strain proved to be the best parameter for an analysis of the numerically obtained FLC. Seven different specimen geometries were used by evaluating the numerically defined FLC.

The methodology used for a determination of the FLC with numerical simulations can be summarised in the following seven steps:

1 – Searching the most thinned node. On the analysed FEM model the most thinned nodes of the specimen for the whole forming time, which is separated into time intervals of t_0, are searched.

2 – Defining the thickness strain. The most thinned nodes of all the time increments are indicated and entered in program for the FEM analyses (ABAQUS). For that, nodes corresponding to the thickness strain during the whole forming process are recorded.

3 – Calculation of the first and second temporal derivatives of thickness strain. It is supposed that the onset of necking is related with a typical increase of thickness strain versus time. A sharp variation of φ_s is best represented by a second temporal derivative, which is calculated and analysed for each of the most thinned nodes. The second strain derivative is defined as:

$$\ddot{\varphi}_s = \frac{d^2\varphi_s}{dt^2} \qquad (1).$$

4 – Označevanje največje vrednosti drugega časovnega odvoda za posamezno vozlišče. Izračunana sta prvi in drugi časovni odvod plastične deformacije. Oba imata vrh strogo lokaliziran v času, okoli katerega se pojavi tudi koleno deformacijske krivulje. Vrh drugega odvoda, ki pomeni precejšno razliko v hitrosti deformacije, prikaže čas, pri katerem naj bi se pojavila numerično dobljena lokalna kontrakcija.

5 – Izbiranje največje vrednosti drugega časovnega odvoda med vsemi vozlišči. Napišemo algoritem, ki

4 – Indicating the maximal value of the second temporal derivative for an individual node. The first and second temporal derivatives of plastic strain are calculated. Both have a peak that is rigorously localized in time, around which the knee of the strain curve appears. The peak of the second derivative, which acts as a large variation in the deformation velocity, represents the time in which the numerically defined necking is supposed to appear.

5 – Selecting the largest value of second temporal derivative among all the nodes. The algorithm was primerja čase nastankov največjih vrednosti drugega odvoda posameznih vozlišč preizkušanca in zapiše čas nastanka ter številko vozlišča, pri katerem se je največja vrednost drugega odvoda najhitreje pojavila.

6 – Zapis glavnih deformacij v prečni (φ_1) in vzdolžni (φ_2) smeri vozlišča. Zapišemo glavni deformaciji v prečni in vzdolžni smeri vozlišča, ki ga je shranil algoritem, opisan v koraku 5.

7 – Risanje numerično dobljene KMD. Koraki 1 do 6 se ponavljajo za vseh sedem geometrijskih oblik preizkušanca, s čimer ovrednotimo različna področja v diagramu deformacijskih stanj.

Med analiziranjem nastanka lokalizacije oz. zloma na posameznem preizkušancu po zgoraj opisani metodi se lahko pri različnih vozliščih v enakem trenutku pojavi izrazita sprememba $\ddot{\varphi}_s$. Pri nadaljnji analizi ugotovimo, da so to sosednja vozlišča, ki se nahajajo v področju nastanka lokalizacije oz. porušitve preizkušanca. Zato je na sliki 9 pri določeni geometrijski obliki vzorca prikazanih več kritičnih točk.

3 PRIMERJAVA PREIZKUSNO IN NUMERIČNO DOBLJENE KRIVULJE MEJNIH DEFORMACIJ

Za določanje numerične krivulje mejnih deformacij, smo uporabili enak material preizkušanca kakor pri preizkusnem določanju KMD. Preizkusni del je bil izveden na orodju za Marciniakov preizkus, opremljen z optičnim sistemom za vrednotenje podatkov v Laboratoriju za preoblikovanje na Fakulteti za strojništvo v Ljubljani.

Slika 9 prikazuje preizkusno in numerično dobljene točke KMD za vročo cinkano jekleno pločevino. Spodnja črta na diagramu predstavlja lokalizacijo, zgornja pa porušitev preizkušanca pri preizkusnem določanju KMD.

Z opisanim numeričnim kriterijem za določevanje KMD napovedujemo začetek lokalnega stisnjenja na preizkušancu. Pri analizi diagrama ugotovimo, da se leva stran numerično dobljenih točk, v primerjavi s preizkusom, nagiba k napovedovanju pretrga preizkušanca. Iz omenjenega lahko ugotovimo, da z numeričnim kriterijem ne moremo natančno določiti začetka lokalizacije na preizkušancu pri vseh geometrijskih oblikah vzorcev. Problem bi rešili s pogostejšim shranjevanjem tanjšanja posameznih vozlišč na preizkušancu, predvsem v trenutku nastanka lokalizacije.

written that compare the origin times of maximal value of the second derivative for particular specimen nodes and then write down the origin time and the node number at which the maximal value of the second derivative first appeared (at minimum time).

6 – Recording the main strains in the transversal (φ_1) and the longitudinal (φ_2) direction of the node. The main strains are written down in transversal and longitudinal directions for the node, and saved with the algorithm described in step 5.

7 – Plotting the numerical FLC. Steps 1 to 6 are repeated for each of the seven specimens' dimensions in order to evaluate the different areas in the FLD diagram.

During the analysis the onset of necking and fracture in the particular specimens by the methodology described above can appear at different nodes at the same moment expressive variation of the $\ddot{\varphi}_s$. However, with further analysis this node was determined as adjacent nodes, that are in the area, where the necking or failure on the specimen originates. Therefore, more critical points for the defined specimen geometry are shown in Figure 9.

3 COMPARISON OF THE EXPERIMENTAL AND NUMERICALLY OBTAINED FLC

The numerical and experimental determinations of the FLC were performed with the same material properties. The experiments were carried out on the Marciniak test tool and optical data-acquisition equipment in the Forming Laboratory, Faculty of Mechanical Engineering, Ljubljana.

The experimental and numerically obtained points of the FLC for hot-galvanized steel are shown in the Figure 9. The lower line on the diagram represents the localization, whereas the upper line represents specimen failure by the experimentally defined FLC.

With this numerical approach for the determination of the FLC the onset of necking on the specimen is predicted. Furthermore, it is evident from the diagram that the left side of the numerically obtained points tends to predict specimen fracture in comparison with the experimental test. However, it could be established that it is not possible to accurately determine the onset of necking on the specimen for all the analysed geometries using the numerical criterion. The problem could be solved with a higher frequency of data saving for all the nodes on the specimen, especially at the moment when the necking occurs.

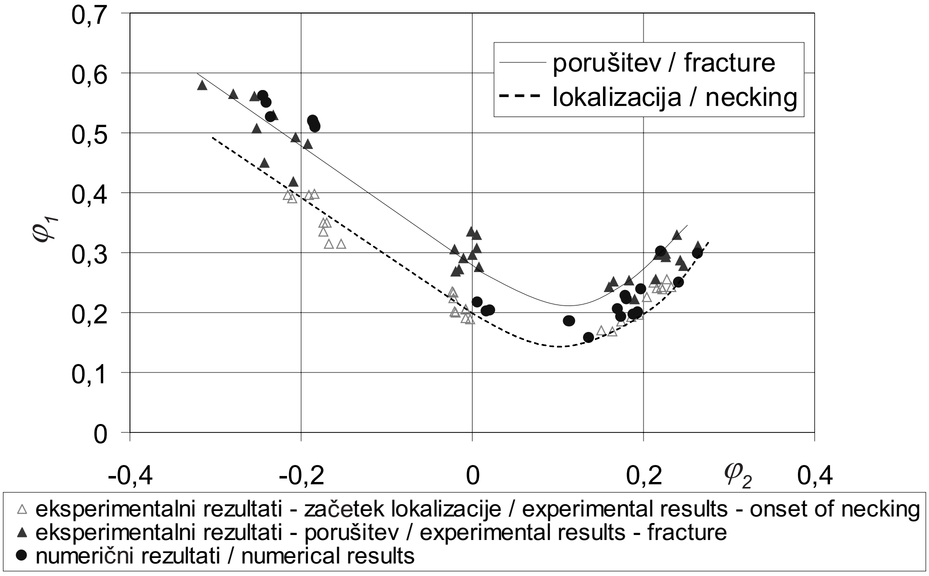

Sl. 9. *Primerjava numerično in preizkusno dobljene KMD*
Fig. 9. *Comparison of numerical and experimental obtained FLD*

Numerično dobljene točke mejnih deformacij se pojavljajo med področjem, ki ga zajemata KMD lokalizacije in zloma preizkušancev pri preizkusu. Ker se področje numerične krivulje nahaja v kritičnem področju preizkusne krivulje, jo lahko vsekakor uporabimo za oceno preoblikovalnosti materiala.

Do odstopanj med numerično in preizkusno dobljenimi točkami mejnih deformacij lahko pride zaradi vizualnega pregleda posnetkov začetka lokalizacije in kasneje zloma na preizkušancu pri preizkusnem določanju točk, kar ima lahko pristransko naravo. Z uporabo pogostejšega shranjevanja posnetkov bi lahko omenjeni pristranski vpliv zanemarili.

Pri določevanju KMD z numerično simulacijo pa se izognemo pristranskemu vplivu določitve lokalizacije na preizkušancu. V tem primeru je natančnost numerično analizirane lokalizacije na preizkušancu odvisna od gostote shranjevanja podatkov med simulacijskim postopkom.

Primerjava med preizkusno in numerično dobljeno KMD je bila izvedena na podlagi treh različnih oblik vzorcev (na diagramu slika 9: levo - platina širine 90 mm, sredina – platina širine 130 mm in desno – rondela). Zaradi natančnejšega poteka numerične KMD so v diagram (sl. 9) vnesene tudi mejne deformacije preostalih numerično analiziranih preizkušancev (platina širine: 95 mm, 135 mm, 150

Numerically obtained points of the strain limits appear between the area that is limited with necking and the fracture limit curve by an experimental determination of the FLC. Since the numerical curve is placed in a critical area of the experimental curve it can be anyway used for the estimation of the material formability.

The deviation between the numerically and experimentally obtained strain limit points can be related to a visual data evaluation of the onset of necking and the later fracture in the specimen by an experimental determination of the points, which can have a subjective nature. The above-mentioned subjective influence can be neglected by using repeated data saving.

The subjective influence of the necking definition on the specimen is negligible for a numerical determination of the FLC. In this case the accuracy of the numerically analysed necking on the specimens depends on the frequency of the saved data.

The comparison between the experimentally and numerically obtained FLC is based on three different test geometries (Figure 9: left – specimen width of 90 mm, middle – specimen width of 130 mm and right – blank of 200 mm in diameter). The limit strains of the other numerically analysed specimens with widths of 95 mm, 135 mm, 150 mm and 165 mm are also entered in the diagram (Figure 9) for an acmm in 165 mm). Za natančnejšo določitev lege KMD bi bilo potrebno analizirati večje število preizkušancev s širinami okoli 130 mm, saj še tako majhna sprememba geometrijske oblike vzorca vpliva na spremembo poteka deformacije v odvisnosti od časa.

4 SKLEP

Največja prednost predstavljene metode je možnost avtomatizacije in vrednotenje velikega števila različnih geometrijskih oblik preizkušancev. Zato je metoda zmožna hitro in zanesljivo napovedati krivuljo mejnih deformacij.

Kljub temu, da prihaja do razlik med numerično in preizkusno dobljenimi točkami, lahko rezultate štejemo kot dobre, saj se numerično dobljena KMD dobro prilega preizkusni KMD na celotnem območju diagrama mejnih deformacij.

Dobljeni so zadovoljivi rezultati z nižjimi stroški in v krajšem času kakor pri preizkusu. Z natančnejšim vnosom materialnih podatkov v numerični program bi dosegli popolnejšo krivuljo mejnih deformacij.

V nadaljevanju raziskovalnega dela bomo z opisano metodo določili še KMD za materiale, ki imajo drugačne mehanske lastnosti (aluminij, titan, nerjaveče jeklo itn.). S tem bomo dobili potrditev o splošni veljavnosti tako dobljenih krivulj mejnih deformacij, v primeru odstopanj pa bomo skušali ugotoviti vzroke za njihov nastanek.

curate definition of the numerical FLC. A large number of specimens with widths around 130 mm would be needed to analyse the accurate position of the FLC, because a small difference in the specimen geometry can have an enormous influence on changes to the strain path against time.

4 CONCLUSION

The most important advantage of the presented numerical method is its potential for automation and the evaluation of a large number of different specimen geometries. Therefore, the method is able to quickly and reliably predict the forming limit curve.

In spite of the differences between the numerically and experimentally obtained points the final results are acceptable, because the numerically obtained FLC is in good agreement with the experimentally obtained curve over the whole range of the forming limit diagram.

Satisfactory results are obtained with less cost and in a shorter time than with experiment. Of course, the more accurate are the material data for the input of the numerical program, the better is the obtained forming limit curve.

In future research work we will determine, with the above-mentioned numerical approach, the FLCs for other materials with diverse mechanical properties (aluminium, titanium, stainless steel, etc.). In this way the general validity of the presented methodology will be confirmed. In the case of deviations the reasons for these anomalies will be analysed as well.

5 LITERATURA
5 REFERENCES

[1] M. Geiger, M. Merklein (2003) Determination of forming limit diagrams – a new analysis method for characterization of materials' formability; *Annals of the CIRP* Vol. 52/1/2003

[2] S. P. Keeler (1964) Plastic instability and fracture in sheet streched over rigid punches. *ASM Trans*. 56, 25-48.

[3] G. M. Goodwin (1968) Application of strain analysis to sheet metal forming in the press shop. *SAE paper* No. 680093

[4] R. Hill (1952) On discontinuous plastic states, with special reference to localized necking in thin sheets, *J. Mech. Phys. Solids* 1, 1952

[5] H. W. Swift (1952) *J. Mech. Phys. Solids*, 1 (1952) 19.

[6] Z. Marciniak, K. Kuckzinsky (1967) Limit strains in the processes of stretch-forming sheet metal, *Int. J. Mech. Sci.* 9 (1967) 609-620

[7] F. Cayssials (1998) A new method for predicting FLC, *Proc. Of 20th IDDRG*, Genval, Belgium 1998, p. 443-454

[8] F. Gologranc, J. Pipan, P. Bezgovšek, E. Zebec, J. Kadivnik, A. Haring, Z. Horvat (1980) Projekt Obdelovalni sistemi in proizvodna kibernetika, 3. del, Identifikacija preoblikovalnosti tanke pločevine, Ljubljana.

[9] K. Nakazima, T. Kikuma, K. Asuka (1971) Study on the formability of steel sheet. *Yawata Technical Report*, Nr. 264, 1971, p.678-680.

[10] Z. Marciniak, K. Kuczinski, T. Pokora (1973) Influence of the plastic properties of the material on the forming limit diagram for sheet metal tension, *Int. J. Mech. Sci.*, 15 (1973), p. 789-805.

[11] D. Banabic, H.-J. Bunge, K.Pöhlandt, A.E. Tekkaya (2000) Formability of metallic materials; *Springer – Verlag,* Berlin Heidelberg.

[12] R. Brun, A. Chambard, M. Lai and P. de Luca (1999) Actual and virtual testing techniques for a numerical definition of materials; *NUMISHEET 99*; France.

[13] F. Ozturk, D. Lee (2004) Analysis of forming limits using ductile fracture criteria; *Journal of Materials Processing Technology*, 147 (2004) 397-404

[14] J. Kadivnik (1982) Uporaba grafometrične metode pri komparativni analizi preoblikovanja tanke pločevine za izdelavo velikih karoserijskih delov, magisterij, *Fakulteta za strojništvo*, Ljubljana.

[15] J. Pipan, F. Gologranc, Z. Kampuš, T. Špan (1989) Zasledovanje preoblikovalnih procesov z računalnikom. V: Obdelovalna tehnika: 1. seminar, *Fakulteta za strojništvo*, Ljubljana.

[16] F. Gologranc, K. Kuzman (1989) Tehnika preoblikovanja – stanje in smeri razvoja. V: Obdelovalna tehnika: 1. seminar, *Fakulteta za strojništvo*, Ljubljana.

[17] H. J. Kim, H. Y. Kim, I. K. Kwak, Y.S. Shin (1999) Numerical and experimental analysis for the prediction of forming limit in stamping processes; *NUMISHEET 99*; France.

[18] M. C. Butuc, J.J. Gracio, A. Barata da Rocha (2003) A theoretical study on forming limit diagrams prediction; *Journal of Materials Processing Technology* 142 (2003) 714-724

[19] F. Barlat (1989) Forming limit diagrams-prediction based on some microstructual aspects of materials, *The Minerals, Metals, Materials Society*.

[20] R. H. Wagoner, K.S. Chan, S.P. Keeler (1989) Forming limit diagrams: concepts, methods and applications; Ohio.

Naslov avtorjev: Aleš Petek
dr. Tomaž Pepelnjak
prof.dr. Karl Kuzman
Univerza v Ljubljani
Fakulteta za strojništvo
Aškerčeva 6
1000 Ljubljana
ales.petek@fs.uni-lj.si
tomaz.pepelnjak@fs.uni-lj.si
karl.kuzman@fs.uni-lj.si

Authors' Address: Aleš Petek
Dr. Tomaž Pepelnjak
Prof.Dr. Karl Kuzman
University of Ljubljana
Faculty of Mechanical Eng.
Aškerčeva 6
SI-1000 Ljubljana, Slovenia
ales.petek@fs.uni-lj.si
tomaz.pepelnjak@fs.uni-lj.si
karl.kuzman@fs.uni-lj.si

Prejeto:
Received: 18.2.2005

Sprejeto:
Accepted: 25.5.2005

Odprto za diskusijo: 1 leto
Open for discussion: 1 year