© Strojniški vestnik 46(2000)5,276-290
ISSN 0039-2480
UDK 62-25:621.63:532.57
Izvirni znanstveni članek (1.01)
© Journal of Mechanical Engineering 46(2000)5,276-290
ISSN 0039-2480
UDC 62-25:621.63:532.57
Original scientific paper (1.01)

Prerotacijski tok na vstopu v radialni rotor

Prerotation Flow at the Entrance to a Radial Impeller

Andrej Predin - Ignacijo Biluš

V prispevku je podana analiza prerotacijskega toka v vstopnem cevovodu radialnih turbostrojev, ki se izraziteje pojavlja pri delnem obratovanju stroja, torej zunaj preračunske točke turbostroja. Teoretično se prerotacijski tok pojavlja v vstopnem cevovodu pred vstopom v radialni rotor kot posledica delovanja dejanskega rotorja s končnim številom rotorskih lopatic, ki ustvarjajo rotirajoče rotorske kanale, v katerih nastajajo relativni vrtinčni tokovi znotraj kanala pa tudi okrog rotorskih lopatic. Posledica tega relativnega toka je tudi odlepljanje toka od površine rotorske lopatice, predvsem ob vstopnem robu. Jakost in smer prerotacijskega toka sta odvisni od obratovalnega režima, predvsem od pretoka, ki določa smer prerotacijskega toka. Izvedena je eksperimentalna raziskava v vstopnem cevovodu radialnega ventilatorja. Uporabljen je rotameter z ravnimi krilci v osni smeri vstopnega cevovoda, ki je postavljen v vstopni cevovod na razdalji poldrugega premera cevovoda od vstopnega robu rotorskih lopatic. Meritve so izvedene pri različnih vrtilnih frekvencah rotorja in različnih obratovalnih pretokih.
© 2000 Strojniški vestnik. Vse pravice pridržane.
(Ključne besede: turbostroji, ventilatorji radialni, tok prerotacijski, analize tokov)

In the following paper an analysis is given of the prerotation flow in the entrance pipe of a radial turbomachine which occurs at partial load, this is during operation under out-of-design conditions. Theoretically, the prerotation flow appears in the entrance pipe before the entrance in the radial impeller as a result of the real radial impeller acting. The finite number of blades creates the impeller channels where the relative whirl flow exists, in addition to around the individual impeller blades. The result of the relative flow is also the separation of flow from the surface of the blade, especially at the entrance edge. The prerotation flow magnitude and direction depend on the operating regime, especially on the operating capacity. The experimental research is carried out at the entrance pipe of the radial fan. An anemometer with straight blades that are parallel to the pipe axis is used and placed at a distance of one and half pipe diameters infront of the entrance edge of the impeller blades. The measurements were performed at three different impeller speeds and at different operating capacities.
© 2000 Journal of Mechanical Engineering. All rights reserved.
(Keywords: turbomachinery, radial fan, prerotation flows, flow analysis)

0 UVOD

Obstoj prerotacijskega toka je znan že precej časa, vendar osnovni razlogi pojava še niso raziskani. Prvi je ta tok odkril Stewart [1], že davnega leta 1909, ponovno pa najdemo zapis o tem pojavu pri Stepanoffu [2], leta 1957, ki je ta pojav opisal z vstopnimi »Eulerjevimi« hitrostnimi trikotniki na vstopu v rotorske kanale na vstopnem premeru D_1 ob upoštevanju teorije potencialnega toka. Prerotacijski tok omenja tudi Schweiger [3], ki ga tesno povezuje s kavitacijskimi pojavi v radialni črpalki. Podoben problem obravnava tudi Siervo [4]. Brennen [5] opisuje, da je prav pojav prerotacije toka mnogokrat najbolj zgrešeno predstavljen in napačno razumljen pojav pri turbostrojih, ker je to pojav

0 INTRODUCTION

The existence of prerotation flow has been known for a long time, but the basic reasons for its existence have not yet been examined. In 1909, the discovery of prerotation how was reported by Stewart [1]. There was a note about prerotation flow by Stepanoff [2], (in 1957), who describes this phenomenon with Euler's entrance velocity triangles at the entrance to the impeller channels with an entrance diameter D_1, considering the laws of the potentional flow. Schweiger [3] claims that the prerotation flow is strongly connected with cavitation appearance in a radial pump. The same problem was also treated by Siervo [4]. Brennen [5] reports that the phenomenon of prerotation flow is very often misrepresented

interakcije mnogih nastalih sekundarnih tokov pred rotorjem, v njem in za njim. Poznavanje prerotacijskega toka, ki je odvisen od pretočnih razmer in geometrijske oblike, je tudi ključnega pomena pri določitvi kavitacijskega vrtinca vodnih črpalk ali drugih črpalk, ki obratujejo s kapljevinami. Vrtinčni tok radialnega kompresorja sta preučevala tudi Van den Braembussche in Hände [6], vendar na izstopu v spiralnem vodilniku pri delnem obratovanju kompresorja. Vpliv relativnega vrtinca v rotorskih kanalih v radialnem kompresorju z valjastimi nazaj ukrivljenimi lopaticami je proučeval Sipos [7]. Z vizualizacijo toka na vstopu v radialni kompresor sta se ukvarjala tudi Mizuki in Oosawa [8], ki sta upoštevala tudi Helmholtzove resonatorske frekvence toka, ustvarjene kot posledica velikih vstopnih hitrosti toka. Določitev vstopnega kota toka v rotor kompresorja v bližini zvočne hitrosti so proučevali Steiner, Fuchs in Starken [9]. V prispevkih Predina [10] in [11] so podani osnovni rezultati meritev na poenostavljenem modelu reverzibilne črpalne turbine in preprosti matematični model za oceno prerotacije toka, ki bazira na osnovi kinematike toka. Da tak tok v vstopnem cevovodu obstaja, so nesporno ugotovili mnogi raziskovalci, zakaj se pojavi, zakaj spremeni smer in jakost v odvisnosti od obratovalnega pretoka, pa so vprašanja, ki še nimajo ustreznih odgovorov.

1 TOK NA VSTOPU V ROTOR RADIALNEGA TURBOSTROJA

Večina kapljevin, ki prehajajo skozi turbostroje je viskoznih, dejanski tok skozi turbostroj pa je v večini primerov turbulenten. V vstopnem cevovodu in v rotorskih kanalih je torej treba obravnavati turbulentni viskozni tok. Seveda so osnova nastanka prerotacijskega toka, ki nastane

and misunderstood for turbomachines, because it is a phenomenon of interaction in which many secondary flows appear before, in and after the impeller. A knowledge of prerotation flow at the entrance of the impeller or in the intake pipe is also important for cavitation-swirl determination in water pumps or any other pumps that operate with liquids. Van den Braembussche and Hände [6] examined the swirl flow at the radial compressor, but their studies looked at the compressor exit in the spiral volute by the compressor part operating regime. Sipos [7] examined the influence of the relative swirl in the impeller channels at the radial compressor with back-curved blades. Mizuki and Oosawa [8] investigated flow visualization at the entrance of the radial compressor. They also considered the Helmholtz resonator flow frequencies, which appeared as a result of the high entrance flow velocities. Steiner, Fuchs and Starken examined the entrance angle of the flow at the compressor entrance near the sonic velocity [9]. In the contributions of Predin [10] and [11] the results of measurements on a simplified pump-turbine model and a simple mathematical model based on flow kinematics for the prerotation flow determination are given. The existence of this prerotation flow is incontestable and has been proved by many researchers, but the question why the prerotation flow changes direction and magnitude depending on the operating capacity has not yet been answered.

1 FLOW AT THE ENTRANCE TO THE RADIAL TURBOMACHINE

Most fluids that cross the turbo machines are viscous fluids. The real flow through the turbomachine is, in most cases, turbulent. Therefore, the flow in the entrance pipe as well as the flow in the impeller channels must be treated as a turbulent viscous flow. Indeed, the origins of prerotation flow,

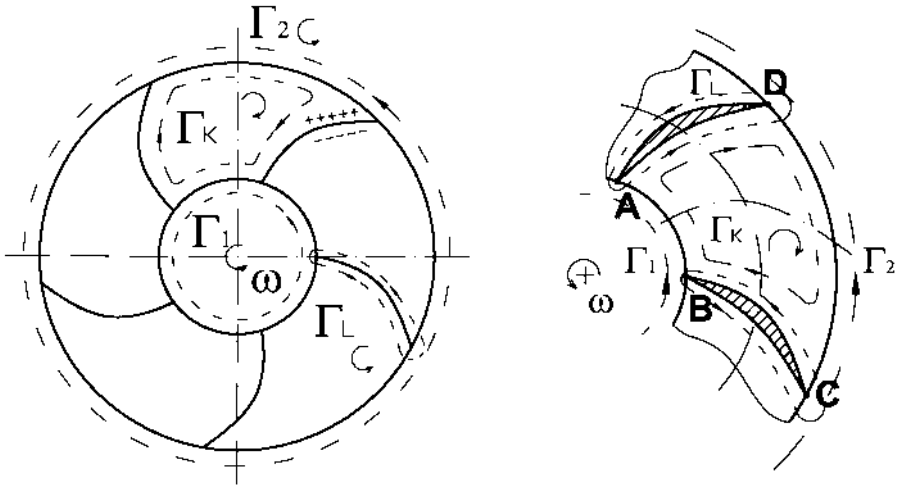

Sl. 1. *Cirkulacijski tokovi v radialnem rotorju*
Fig. 1. *Circulation flows in the radial impeller*

zaradi odlepljanja mejne plasti, naslednji: 1. relativni cirkulacijski tokovi v posameznih rotorskih kanalih, 2. cirkulacijski tokovi okoli posameznih rotorskih lopatic in s temi nastala cirkulacijska tokova na vstopnem oz. izstopnem premeru rotorja (sl. 1).

Cirkulacijski tok oz. cirkulacijo lahko v splošnem zapišemo s krivuljnim integralom poljubne vektorske veličine, npr. hitrosti toka [12]:

which is the result of the boundary layer separation in the intake pipe, are: the relative flow whirls at the individual impeller channels and the circulation flows around the impeller blades, which form circulation flow at the entrance and exit diameters of the impeller (Figure 1).

The circulation flow, or circulation in general, can be represented by the curve integral of the general vector quantity, for example of the flow velocity [12]:

$$\Gamma = \oint_L \vec{v} \cdot d\vec{l} \qquad (1),$$

kjer je $\vec{\upsilon}$ - vektor hitrosti toka, skalarno pomnožen z diferencialno dolžino $d\vec{l}$ sklenjene krivulje L. Ker pa je vektor hitrosti $\vec{v} = (v_x, v_y, v_z)$ in $d\vec{l} = (dx, dy, dz)$, zapišemo enačbo (1) v obliki:

where $\vec{\upsilon}$ is the flow velocity vector dot multiplied by the differential element $d\vec{l}$ of the closed integrated curve L. While the velocity vector is $\vec{v} = (v_x, v_y, v_z)$ and $d\vec{l} = (dx, dy, dz)$, equation (1) can be written:

$$\Gamma = \oint_L \left(v_x dx + v_y dy + v_z dz\right) \qquad (2).$$

Z upoštevanjem zveze $\vec{v} \cdot d\vec{l} = v \cos\alpha \, dl = v_t dl$, dobimo:

Considering the relation $\vec{v} \cdot d\vec{l} = v \cos\alpha \, dl = v_t dl$ we obtain:

$$\Gamma = \oint_L v_t dl \qquad (3),$$

kjer je v_t - obodna hitrost tekočine, ki obteka neko telo, omejeno s krivuljo L. V konkretnem primeru lahko enačbo (3) izkoristimo za določitev prej omenjenih cirkulacij. Tako lahko zapišemo cirkulacijo na vstopnem premeru D_1 kot:

where v_t is the circumferential fluid velocity of the flow around the rigid body formed by the curve L. In this case equation (3) can be used for the determination of the circulations. The circulation at the entrance diameter D_1 can be written as:

$$\Gamma_1 = c_{1u} \pi D_1 \qquad (4)$$

in ustrezno na izstopnem premeru D_2:

and by analogy at the diameter D_2:

$$\Gamma_2 = c_{2u} \pi D_2 \qquad (5),$$

kjer c_{1u} sta c_{2u} in - absolutni hitrosti toka v obodni smeri na vstopu oz. izstopu iz rotorja. Cirkulacijo v posameznem rotorskem kanalu lahko v eni ravnini, npr. v ravnini srednjice po širini rotorja, določimo z integracijo obodnih hitrostih, ki se pojavljajo ob stenah posameznega rotorskega kanala na posameznih delih (sl. 2):

where c_{1u} and c_{2u} are the absolute flow velocities in the circumferential direction at the entrance- and exit-impeller diameter, respectively. The circulation in the individual impeller channel in one plane, for example in the plane of the middle streamline of the impeller width, can be determined by circumferential velocity integrating near the walls of the impeller channel at the particular channel parts (Fig. 2):

$$\Gamma_K = -\int_A^B c_{1u} dAB + \int_C^B w_t dBC + \int_D^C c_{2u} dCD - \int_D^A w_s dDA \qquad (6)$$

ali

or

$$\Gamma_K = -c_{1u} \frac{D_1}{z_r} + w_t l_{lop} + c_{2u} \frac{D_2}{z_r} - w_s l_{lop} \qquad (7),$$

$$\Gamma_K = -c_{1u} t_1 + w_t l_{lop} + c_{2u} t_2 - w_s l_{lop} \qquad (8),$$

kjer so: t_1 - delitev na vstopnem in t_2 - na izstopnem premeru rotorja, l_{lop} - ločna dolžina lopatice, w_t - je relativna hitrost ob tlačni in w_s - ob sesalni strani rotorske lopatice. V enačbi (8) je problematična teoretična določitev relativnih hitrosti w_s in w_t, ki

where t_1 is the division at the entrance and t_2 at the exit diameter, l_{lop} is the blade curved length, w_t is the relative flow velocity at the pressure side of the blade and w_s at the suction side. In equation (8) the theoretical determination of the relative flow velocities

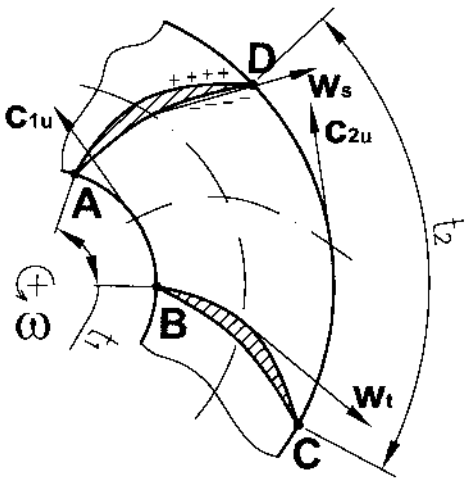

Sl. 2. *Cirkulacija v rotorskem kanalu*
Fig. 2. *Circulation in the impeller channel*

se spreminjata vzdolž dolžine rotorske lopatice. Po Eckertu in Schnelu [13] je razlika relativnih hitrosti ob sesalni in tlačni strani lopatice podana z:

w_s and w_t, which change the direction of the impeller blade, is problematic. Eckert in Schnel [13] defined the difference of the relative flow velocities between the pressure and suction side of the blade as follows:

$$\left(w_s - w_t\right) = 4\left(c_{2u} - c_{3u}\right) \quad (9),$$

in:

and:

$$c_{2u} - c_{3u} = \frac{\pi D_2^2 b_2 c_{3u}}{8 z_r S} \sin\beta_2 \quad (10),$$

kjer je: b_2 - širina rotorja na izstopnem premeru, z_r - število rotorskih lopatic, β_2 - kot rotorske lopatice in S - odpornostni moment:

where b_2 is the impeller width on the impeller exit diameter, z_r the number of impeller blades, β_2 the blade angle and S the moment of resistance:

$$S = \int_{r_1}^{r_2} \left(b\, r\right) dr \quad (11).$$

Če gornje zveze uporabimo v enačbi (8) lahko izračunamo cirkulacijo v rotorskem kanalu kot:

Using these relations in equation (8) we obtain the following equation for circulation in the impeller channel:

$$\Gamma_K = -c_{1u} t_1 + c_{2u} t_2 - l_{lop} \frac{\pi D_2^2 b_2 c_{3u}}{2 z_r S} \sin\beta_2 \quad (12),$$

ki jo lahko na podlagi znane geometrijske oblike črpalke tudi izračunamo.

Cirkulacijo okrog rotorske lopatice lahko izračunamo na podlagi energijske razlike, ki jo črpalka dosega. Izhajajoč iz vrtilnega momenta:

which can be calculated using the known pump geometry.

The circulation around the impeller blade can be calculated according to the energy difference that is achieved by the pump. The torque or the moment that is achieved is:

$$M = z_r \int_{r_1}^{r_2} \Delta p b r dr \quad (13),$$

kjer sta: Δp - tlačna razlika, ki jo rotor dosega, b - pa širina rotorja. Upoštevajoč, da je tlačna razlika enaka razliki kvadratov relativnih hitrosti med vstopom in izstopom iz rotorja, pomnožena z gostoto tekočine, dobimo:

where Δp is the pressure difference that is achieved by the impeller and b is impeller width. Considering that the pressure difference is equal to the difference of the squared relative flow velocities of the impeller entrance and exit multiplied by the fluid density, we obtain:

$$\Delta p = \frac{\rho}{2}\left(w_1^2 - w_2^2\right)$$

in ob upoštevanju vrtilne frekvence rotorja ω ter masnega pretoka skozi rotor $\dot{m}$, lahko zapišemo energijsko razliko v obliki:

and by considering the impeller angular speed ω and the mass capacity through the impeller $\dot{m}$ we can write the energy difference as:

$$Y_{th} = gH_{th} = \frac{\omega z_r \rho}{2\dot{m}} \int_{r_1}^{r_2} \left(w_1^2 - w_2^2\right) brdr \qquad (15),$$

ki jo izenačimo z Eulerjevo glavno enačbo [14], ki upošteva cirkulacijo okrog rotorskih lopatic, pri doseganju energijske razlike radialnega rotorja kot vsoto vseh cirkulacij okrog posamezne lopatice:

which can be equalized by Euler's main equation [14], which considers the circulation around the impeller blades as the energy difference achieved by the radial impeller as the sum of all the circulations around the individual impeller blades:

$$Y_{th} = gH_{th} = \omega \frac{z_r \Gamma_L}{2\pi} = \omega\left(r_2 c_{2u} - r_1 c_{1u}\right) \qquad (16),$$

od koder lahko izrazimo cirkulacijo okrog rotorske lopatice kot:

from where the circulation around an individual impeller blade can be represented as:

$$\Gamma_L = \frac{2\pi}{z_r}\left(r_2 c_{2u} - r_1 c_{1u}\right) = \frac{\pi}{z_r}\left(D_2 c_{2u} - D_1 c_{1u}\right) \qquad (17).$$

S cirkulacijami, določenimi na vstopnem premeru Γ_1 en. (4), na izstopnem premeru rotorja Γ_2 en. (5), v rotorskem kanalu Γ_K en. (12) in okoli rotorske lopatice Γ_L en. (17) lahko zapišemo dve ravnotežni enačbi cirkulacij, kot vsoto cirkulacij v neki ravnini od vstopnega do izstopnega robu rotorja:

According to the circulations, determined at the impeller entrance diameter Γ_1 eq. (4), at the exit diameter Γ_2 eq. (5), in the impeller channel Γ_K eq. (12) and around the impeller blade Γ_L eq. (17), two equilibrium equations, based on two different circulation directions (circulation in the impeller channel and circulation around the impeller blade), can be written as:

$$\Gamma_2 = \Gamma_1 + z_r \Gamma_K \qquad (18),$$

$$\Gamma_2 = \Gamma_1 + z_r \Gamma_L \qquad (19).$$

Enačbo (18) lahko zapišemo npr. za sredino rotorskega kanala, enačbo (19) pa za potek cirkulacij v smeri sredine rotorske lopatice od vstopnega do izstopnega roba. Enačba (19) naj bi opisovala razmere toka v sledi rotorske lopatice. V idealnem primeru, kar izhaja iz obeh ravnotežnih enačb (18) in (19), bi se pojavila enakost cirkulacij okrog rotorske lopatice in cirkulacije v rotorskem kanalu:

Equation (18) can be written, for example, for the central part of the impeller channels, and equation (19) for the central part of the blade from the entrance up to the exit blade edge. Equation (19) represents the flow properties following the blade wake. In the ideal case, as it follows from both equilibrium equations (18) and (19), the equality of circulation around the blade and the circulation in the impeller channels can be written as:

$$\Gamma_L = \Gamma_K \qquad (20).$$

Iz ravnotežnih enačb (18) in (19) je razvidno, da cirkulacijski tok okrog rotorskih lopatic vpliva na cirkulacijo na izstopnem premeru Γ_2 in s tem tudi energijsko razliko, ki jo rotor dosega. Enako velja za cirkulacijo v rotorskem kanalu. Iz tega lahko sklepamo, da je oblika obratovalne značilnice v veliki meri odvisna od razmerja med cirkulacijo okrog rotorske lopatice in cirkulacijo v rotorskem kanalu rotorja. Osnovna vzroka nastanka teh dveh cirkulacij sta različna, pa vendar med seboj povezana. Cirkulacijski tok v rotorskem kanalu je gnan s Coriolisovo silo [15], ki se pojavi zaradi relativnega gibanja toka skozi krožeči ukrivljeni rotorski kanal. Cirkulacijski tok okoli rotorske lopatice pa nastane zaradi različnih tlakov toka

From both equilibrium equations (18) and (19) it is also evident that the circulating flow around the blades influences the circulation at the exit diameter Γ_2 and therefore also affects the energy difference of the fan (achieved fan's head). The same can be concluded for the circulation in the impeller channels. According to this, it is possible to conclude that the fan's operating characteristic shape depends on the ratio of the circulation around the impeller blades and the circulation in the impeller channels. The causes of the circulating flows are different, but they are connected. The circulating flow in the impeller channel is driven by the Coriolis force [15] and appears as a result of relative flow movement through the rotated curved impeller channel. The circulating flow around the impeller blade is created as a result of the different pressures at the

ob zgornji oziroma spodnji (tlačni oz. sesalni) strani rotorske lopatice (odlepljanje toka), zaradi česar se pojavijo različne relativne hitrosti ob rotorski lopatici, ki so gonilo cirkulacijskega toka okrog lopatice.

Obstoj enakosti obeh cirkulacij je torej v zvezi:

upper (pressure) side and the lower (suction) side of the blade surface (flow separation). The causes of this pressure difference are the different relative flow velocities near the blade surface, which are the cause of the circulation around the blade.

The equallity of both circulations therefore exists in the following relation:

$$\pi\left(D_2 c_{2u} - D_1 c_{1u}\right) = \left(\frac{\pi D_2}{z_r} c_{2u} - \frac{\pi D_1}{z_r} c_{1u} + l_{lop}\left(w_t - w_s\right)\right) \quad (21).$$

Z ureditvijo enačbe (21) dobimo naslednjo zvezo za določitev absolutne hitrosti toka v obodni smeri na vstopnem premeru D_1:

By rearanging equation (21) we obtain the following relation for absolute flow velocity in a circumferential direction at an inlet diamater D_1:

$$c_{1u} = \left(\frac{D_2}{D_1}\right) c_{2u} + \frac{z_r l_{lop}}{\pi D_1 \left(z_r - 1\right)}\left(w_t - w_s\right) \quad (22),$$

od koder lahko poiščemo razmere oz. absolutno hitrost toka v obodni smeri na izstopnem premeru rotorja, pri kateri bo ekvivalentna hitrost c_{1u} na vstopnem premeru nič. To hkrati pomeni, da je teoretično tudi prerotacijski tok v vstopnem cevovodu nič. V teh razmerah je izstopna absolutna hitrost toka v obodni smeri na izstopnem premeru rotorja D_2:

from where we can find the absolute flow velocity in the circumferential direction at the outlet diameter D_2 where the equivalent velocity c_{1u} equals zero. In theory this also means that the prerotation flow in the inlet pipe does not exist. Under these conditions, absolute flow velocity in the circumferential direction at an outlet diameter D_2 is:

$$c_{2u} = \frac{l_{lop} z_r}{\pi D_2 \left(z_r - 1\right)}\left(w_s - w_t\right) \quad (23).$$

Z upoštevanjem enačb (9) in (10) izpeljemo zvezo:

Considering equations (9) and (10) the following formula can be derrived:

$$c_{2u} = \frac{l_{lop} D_2 b_2 \sin\beta_2}{2\left(z_r - 1\right) S} c_{3u} \quad (24).$$

Iz gornje enačbe je razvidno, da je absolutna hitrost toka v obodni smeri na izstopu iz rotorja odvisna od geometrijskih podatkov rotorja $\left(l_{lop}, D_2, b_2, \beta_2, S\right)$ in absolutne hitrosti c_{3u} za izstopnim premerom rotorja, ki upošteva zdrs toka oz. nepopolnost rotorja. Vse naštete parametre lahko združimo v neko konstanto K_R in zapišemo zvezo:

The formula shows that the absolute flow velocity in the circumferential direction at an outlet diameter depends on the geometry $\left(l_{lop}, D_2, b_2, \beta_2, S\right)$ and absolute velocity c_{3u} behind the exit diameter, which considers the flow slip and impeller imperfectness respectively. All the parameters mentioned above can be combined in a constant K_R and written as:

$$c_{2u} = K_R c_{3u} \quad (25),$$

iz katere je razvidno, da upošteva zdrs toka na izstopu iz rotorja. Na osnovi te zveze lahko sklepamo o smiselni pravilnosti izvedenih enačb, ker se rezultat tudi smiselno ujema z izvajanjem Ecka [18].

V preračunski točki bi naj torej rotor dosegal optimalno absolutno hitrost toka v obodni smeri. Kakor je znano, se energijska razlika, ki jo rotor dosega na področju podoptimalnih oz. podpreračunskih pretokih veča oz. pri nadpreračunskih pa se zmanjšuje. Vendar pri obratovanju zunaj preračunske točke ne moremo izhajati iz dejstva, da je $c_{1u} = 0$, kar najlaže prikažemo z Eulerjevim vstopnim hitrostnim trikotnikom (sl. 3).

Pri manjših pretokih, pod optimalnimi, se pojavi komponenta absolutne hitrosti toka na

From equation (25) it is evident that it considers the slip of the flow at the impeller exit. Based on this formula, the correct derivation of equations can be assumed, because the result is logicaly connected with Eck´s [18] results.

In designing the operating point the optimal operating absolute flow velocities in circumference diameter should be achieved. As is known, the energy difference achieved at capacities in the area of lower, under optimal capacities, increases the energy difference of the fan. In contrast, at larger, over-optimal capacities, the energy difference of the fan decreases. However, following the fan operating out of the design operating point, that the absolute flow velocity in the circumferential direction is zero ($c_{1u} = 0$) cannot be predicted, simply shown by the Euler's entrance flow velocity triangles (Figure 3).

With the fan operating at under-optimal capacities the flow velocity component in the circum-

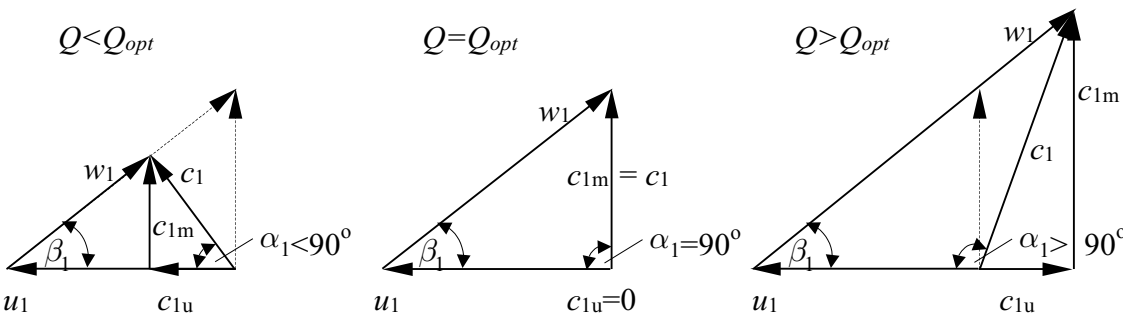

Sl. 3. *Euler-jevi vstopni hitrostni trikotniki pri različnih obratovalnih pretokih*
Fig. 3. *Euler's entrance velocity triangles at different operating capacity*

vstopnem premeru D_1 v obodni smeri v smeri vrtenja rotorja (ista smer kot u_1). Vzrok za nastanek te hitrostne komponente je verjetno v nastalem sekundarnem toku med izstopnim robom rotorja in vstopnim robom skozi vmesno rego med pokrovno steno rotorja in okrovom (sl. 4.a). Zaradi večjega tlaka toka na izstopu iz rotorja del tega vdira skozi rego nazaj proti vstopu v rotor, kjer se ob pokrovni steni rotorja vrti s hitrostjo vstopnega robu rotorja in tako kakor neki »jezik« tekočinskega toka sega v vstopno cev, prek katerega se po načelu viskoznega trenja toka ustvarja prerotacijski tok v vstopnem cevovodu tudi daleč pred vstopom v rotor, tudi do razdalje treh premerov vstopnega cevovoda ($l \approx 3\,D_{v,cev}$). Pri tem režimu lahko štejemo, da se cirkulacija okrog rotorskih lopatic okrepi, saj se zaradi večje obremenitve rotorskih lopatic (doseganje večje energijske razlike) tlak na izstopu iz rotorja poveča. Okrepitev cirkulacijskega toka okrog rotorske lopatice lahko razložimo tudi zaradi zmanjšanja vstopnega kota toka α_1 na vstopu v rotorske kanale ali pri nateku na rotorsko lopatico, pri čemer

ferential direction at the entrance diameter D_1 appears in the direction of the impeller rotation (the same direction as u_1). The reason for the creation of this flow component can probably be found in the appearance of secondary flow near the entrance edge of the impeller blades and across in the gap between the tip impeller shroud and the fan casing (Figure 4.a). Because of the higher pressure at the impeller entrance this part of the flow penetrates through the gap between the impeller tip shroud and the fan casing back to the fan impeller aye where near the tip impeller shroud the flow rotates by velocity u_1 as some tongue of flow that over the flow viscosity creates the prerotation flow in the intake pipe even far from the impeller aye, up to three intake diameter lengths ($l \approx 3\,D_{v,cev}$). According to this operating regime it can be considered that the circulation around the blades increases because of the larger blade load (achieved larger energy difference) which causes an increase of the pressure at the impeller exit. The strengthening of the circulation around the impeller blades can be explained by the entrance flow angle decrease α_1 at the entrance of the impeller channels or by the flow intake on the blade, where the flow cutting and flow

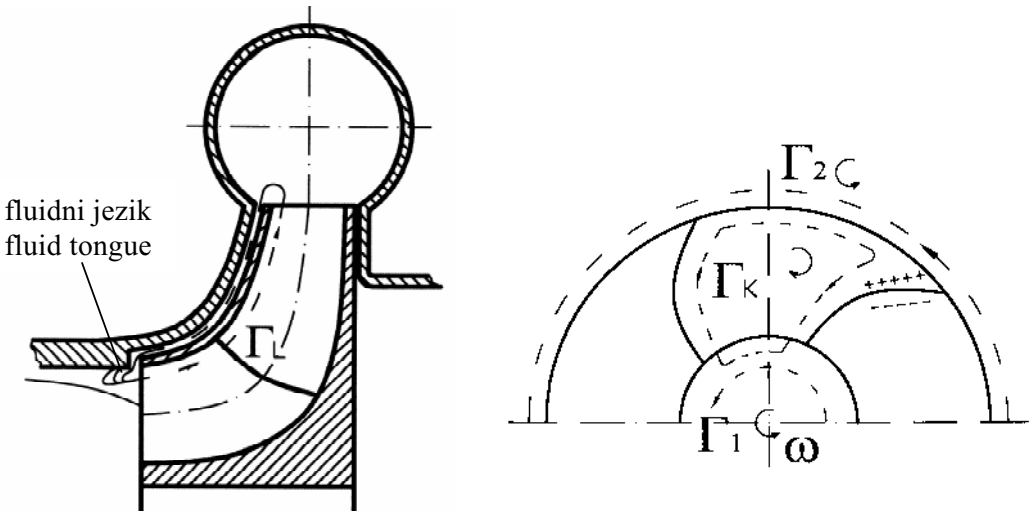

a) b)

Sl. 4. *Sekundarni tok v regi med pokrovno steno in ohišjem (a) in v rotorskem kanalu (b)*
Fig. 4. *Secondary flow in the tip clearance between the tip shroud of impeller and pump casing (a) and in impeller channel (b)*

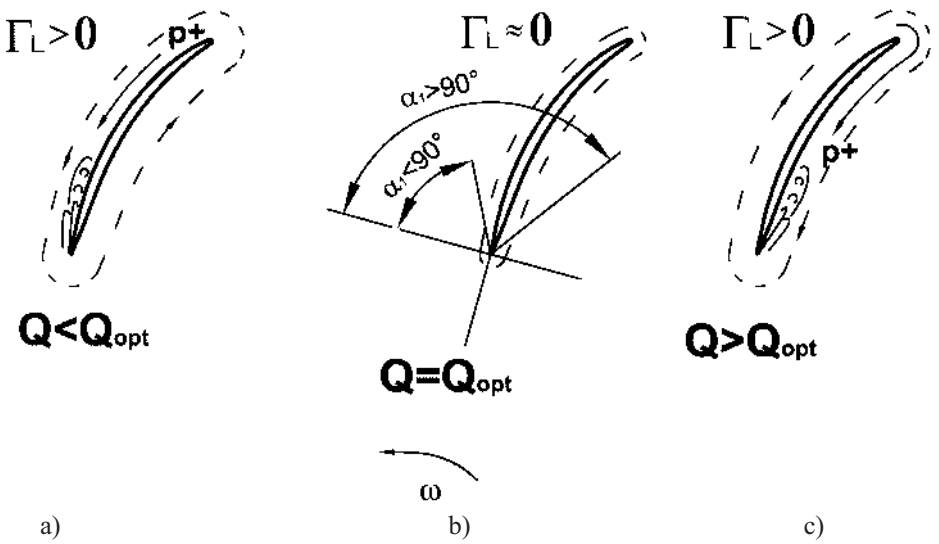

Sl. 5. *Cirkulacijski tok okrog rotorske lopatice v odvisnosti od pretoka*
Fig. 5. *Circulating flow around the impeller blade in dependency of capacity*

prihaja do trganja in vrtinčenja toka na vstopnem robu rotorske lopatice ob sesalni strani (sl. 5). Ker vrtinčenje in odlepljanje toka povzroči padec tlaka, vdre del toka iz področja višjih tlakov (ob izstopnem robu rotorske lopatice) v področje z nižjim tlakom in tako še dodatno okrepi cirkulacijo okrog lopatic.

S povečanjem pretoka prek optimalnega pretoka pa nastaja hitrostna komponenta absolutnega toka na vstopnem premeru rotorja v obodni smeri s smerjo, nasprotno smeri vrtenja rotorja. Da bi lahko rotor »pridelal« večje pretoke, se tok že pred vstopom v rotorske kanale preusmeri v smeri najmanjšega upora, to je v smeri, ki je nasprotna smeri vrtenja rotorja, ker se s tako postavitvijo poveča vstopni kot toka in s tem zmanjša vstopna pot. Gonilo takega toka je najverjetneje povečana cirkulacija v rotorskih kanalih (sl. 4.b), ki prek cirkulacijskih tokov ob vstopnih robovih rotorskih lopatic, segajo kot sekundarni tok v vstopno ustje črpalke/ventilatorja, ki podobno kakor v primeru »ustvarjenega jezika toka« prek tekočinskega trenja, preusmerijo tok v prerotacijski tok v vstopnem cevovodu. Da gre za postopno preusmerjanje toka je razvidno iz rezultatov meritev prerotacije toka, saj se po spremembi obratovalnega pretoka šele po določenem času vzpostavi novo stanje (kotna hitrost anemometra) prerotacije toka v vstopnem cevovodu. Pri tem obratovalnem režimu se vstopni kot toka α_1 poveča (je večji od 90°) tako, da se zaradi prevelikega kota pojavi odlepljanje toka ob zgornji (tlačni) strani rotorske lopatice ob vstopnem robu (sl. 5). Zaradi tega se, podobno kakor pri obratovanju s pretoki pod optimalnimi, ustvarja cirkulacijski tok okrog lopatice v nasprotni smeri od sedanje cirkulacije okrog

separation from the blade suction surface near the blade entrance edge (Figure 5) appears. While the flow vortices and flow separation cause the pressure decrease, the part of the flow from the area of higher pressure (near the exit edge of the impeller blade) penetrates to the lower flow pressure area and in this way strengthens the circulation around the blades.

With a capacity increase over optimal capacity, the absolute flow velocity in the circumferential direction at the entrance diameter and with this velocity component the prerotation flow with a direction opposite to the direction of the impeller rotation is created. For the achieved increased operating capacities the prerotation flow must be diverted before the impeller aye in the direction of the smallest resistance that is in direction opposition to the direction of the impeller rotation. With this flow redirection the increase in the flow entrance angle and thus the shorter entrance path are achieved. The main reason for this increased circulation in the impeller channels (Figure 4.b) is probably the increased circulating flow in the channel. This increased circulating flow causes the secondary flows near the entrance blade edge in the intake pipe, and similarly as in the case of "created flow tongue" drive the prerotation flow far before the impeller aye in the intake pipe over the flow viscosity in the opposite direction of the impeller rotation. The direction change applies gradually, which is evident from the measurement results, while after an operating capacity change, the prerotation flow appears after a short time period, when new operating conditions (angular speed of the anemometer impeller) are stabilized. In this operating regime (over-optimal capacities) the entrance flow angle α_1 increases (it is bigger than 90°) and as a result of too big an entrance angle the flow separation near the pressure blade surface at the entrance blade edge (Figure 5) appears. Because of this flow separation, similar to operating with under-optimal capacities, the circulation flow around the impeller blade in a

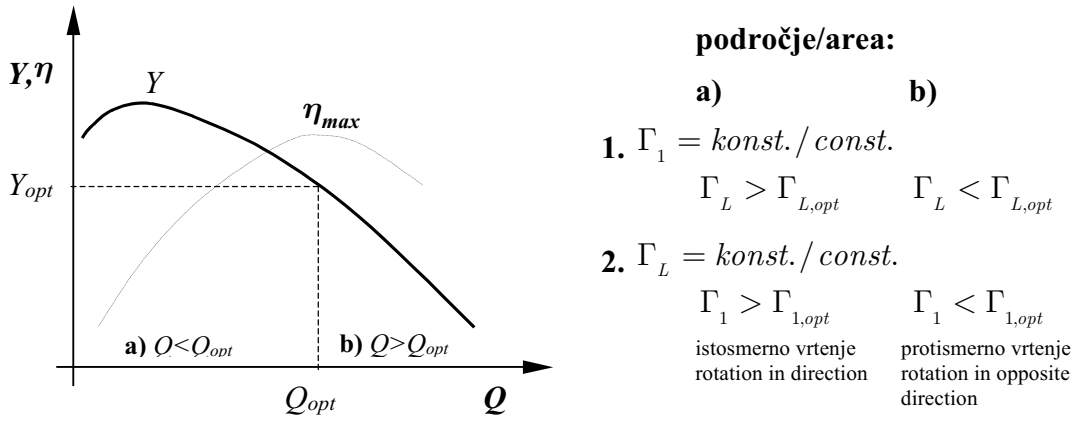

Sl. 6. *Tipična obratovalna značilnica radialnih rotorjev*
Fig. 6. *Typically operating characteristic of the radial impellers*

rotorske lopatice, ki jo tako znižuje. Posledica tega je znižanje cirkulacije na izstopnem premeru D_2 in s tem tudi energijske razlike. Obratovalna karakteristika radialnih rotorjev je večinoma nestabilna, s stabilnim delom v območju večjih obratovalnih pretokov (večjih od kritičnega), kjer je karakteristika zmanjšujoče se oblike oz. tendence. To pomeni, da v stabilnem območju dosežena energijska razlika se zmanjšuje s povečanim pretokom, točka z najboljšim izkoristkom (TNI - BEP) pa praviloma leži nekje v sredini stabilnega dela (sl. 6). Iz enačbe (19) izhaja, da je cirkulacija na izstopnem premeru rotorja enaka vsoti cirkulacije na vstopnem premeru in vsoti vseh cirkulacij okrog rotorskih lopatic. Za področje pod in/ali nad optimalnimi pretoki lahko postavimo dve predpostavki (sl. 6), in sicer:

1. Nespremenljivost cirkulacije na vstopnem premeru $\Gamma_1 = konst.$ pri čemer se mora spreminjati cirkulacija okrog rotorskih lopatic, in sicer tako, da je cirkulacija okrog lopatic v področju pretokov, manjših od optimalnega (področje pod optimalnimi pretoki), večja od cirkulacije okrog lopatice pri optimalnem obratovanju in v področju večjih, nad optimalnih pretokov, kjer mora biti cirkulacija okrog lopatic manjša od cirkulacije okrog lopatic pri optimalnem obratovanju, kar izhaja iz obratovalne krivulje rotorja (sl. 6).
2. Nespremenljivost cirkulacije okrog rotorskih lopatic $\Gamma_L = konst.$, pri čemer se spreminja cirkulacija na vstopnem premeru, in sicer tako, da je v področju pod optimalnimi pretoki večja in v področju nad optimalnimi pretoki manjša od cirkulacije na vstopnem premeru pri optimalnem obratovanju rotorja v točki BEP.

V resničnosti se oba primera prepletata med seboj, saj je težko govoriti o nespremenljivosti katere od cirkulacij pri različnih obratovalnih pretokih. Dejstvo pa je, da se ustvarja prerotacijski tok v nasprotni smeri vrtenja rotorja v območju nad optimalnimi pretoki, kar izhaja iz druge predpostavke. Ustvarjanje prerotacijskega toka je torej celovita

direction opposite to the existing circulation around the impeller blade is created. In this way, the circulation around the blade decreases. A result of this decreased circulation around the blade, is a decreased circulation at the exit diameter D_2 and consequently the energy difference that is achieved by the fan. The operating characteristic of the radial impellers is mostly unstable with the stable part of it in the area of larger operating capacities (larger than the critical capacity), where the operating characteristic has a decreasing tendency. According to this, the achieved energy difference of the fan in the stable part of operating characteristic decreases with the increasing capacity. The operating point of best efficiency (BEP) is in most cases somewhere in the middle of the stable operating part (Figure 6). If we start our observations from equation (19) that shows that the circulation at the exit diameter of the fan impeller is equal to the circulation sum of all circulations around the blades plus circulation at the intake diameter. For the area of the under- and/or over-optimal capacities, two predictions (Figure 6) can be made:

1. Constant circulation at the entrance diameter ($\Gamma_1 = const.$) when the circulation around the blades must be changeable so that it is bigger than the circulation at the optimal operating capacity in the area of capacities smaller than the optimal capacity, and smaller when the operating capacities are larger than the optimal, as it follows from the operating curve of fan (capacity-head curve).
2. The constant circulation around the blade ($\Gamma_L = const.$) when the circulation at the entrance diameter must be changeable so that it is larger in the area of under-optimal capacities and in the area of over-optimal capacities smaller than the circulation by optimal operating at the BEP point of fan.

In reality, both cases interact, so it is difficult to say which one is the constant with different operating capacities. The fact is that the prerotation flow is created in the opposite direction, as it is the direction of impeller rotation in the area of over-optimal capacities as it follows from the second prediction. Creation of the prerotation flow is therefore the result of the integrated circulations around the impeller

posledica cirkulacije okrog rotorskih lopatic, cirkulacije v rotorskih kanalih in cirkulacije na vstopnem premeru v rotor. Vsi ti dejavniki so odvisni od geometrijske oblike rotorja, obratovalnih razmer in obratovalnega pretoka.

2 MERITVE PREROTACIJE TOKA V VSTOPNEM CEVOVODU

Izvedba meritev prerotacije toka je razmeroma zahtevna, ker terja določitev komponente toka v obodni smeri, ki je veliko manjša od komponente hitrosti toka v smeri vtoka oziroma osni smeri. Anemometrijska metoda s sondo z vročo nitko v takih primerih ne daje dobrih rezultatov, ker je pri meritvi opazno veliko obodno ohlajanje nitke zaradi majhnih natekajočih kotov toka, ki tako »popačijo« merilne rezultate. Znan in razmeroma pogosto uporabljan instrument je anemometer z ravnimi krilci. Njegova krilca so postavljena vzporedno z osjo cevovoda, tako da so gnane le z obodno komponento toka, pravokotno na vzdolžno smer cevovoda. Tako dejansko merimo samo obodno komponento toka (prerotacijski tok), ki se pojavi zaradi vrtinčnega toka v vstopnem cevovodu.

Pretok je merjen z Venturijevo šobo, izdelano v skladu s standardom DIN 1952.

2.1 Anemometer z ravnimi krilci

Za določitev prerotacijskega toka instaliranega radialnega ventilatorja, v vstopnem cevovodu premera $D_{v,cev}$ = 0,3 m, je izveden anemometer z ravnimi osnosimetrično postavljenimi ravnimi krilci, nameščenimi na $D_{s,anem}$ = 0,25 m, ki so postavljena vzporedno z osjo cevovoda (sl. 7). Izvedenih je šest ravnih krilc oz. anemometrskih lopatic, ki segajo od

blades, as well as the result of the integrated circulations in the impeller channels and the circulation at the entrance diameter of these impeller. All this acting parameters depend on the impeller geometry, on the operating conditions and on the operating capacity.

2 PREROTATION FLOW MEASUREMENT IN THE INTAKE PIPE

It is relatively pretentious to carry out the prerotation flow measurements because the flow component in the circumferential direction must be measured. This flow or flow-velocity component is much smaller than the main flow component in the intake flow direction or in the axial direction. The anemometer method with a hot-wire probe does not give good results, because with this method large circumferential cooling of the hot-wire probe, which is a result of the small flow angles that distort the results, occurs. A frequently used method for the measurement of prerotation flow is the anemometer method, with the straight blades anemometer. The anemometer blades are placed in a direction which is parallel to the pipe axis, so the blades are driven only by the circumferential flow component, which is perpendicular to the pipe axis. In this way, only the circumferential flow component, that appears as a result of the swirled flow in the intake pipe (prerotation flow), is measured.

The capacity is measured with Venturi‘s nozzle, manufactured according to DIN 1952.

2.1 The anemometer with straight blades

For the prerotation flow determination in the intake pipe with diameter $D_{v,cev}$ = 0.3 m of the installed radial fan the manufactured anemometer with straight blades is used (Figure 7). Six anemometer straight blades that are placed axis-symmetrically from pipe wall to the pipe axis are performed. The middle diameter of the anemometer

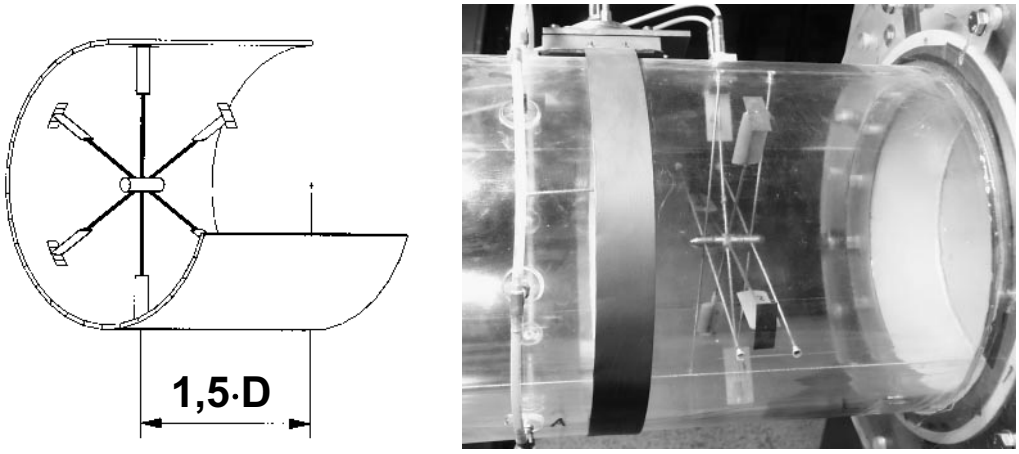

Sl. 7. *Anemometrski sistem v vstopnem cevovodu radialnega ventilatorja*
Fig. 7. *Anemometer system in the entrance pipe of the radial fan*

oboda cevovoda proti osi cevovoda. Višina lopatic je 0,05 m, širina 0,025 m in debelina <0,003 m. Rotor anemometra je dinamično in statično uravnotežen. Na vrhu lopatic (krilc) je nameščena kovinska plošča, ki rabi kot dajalec signala dvema, zaporedno postavljenima induktivnima sondama TURCK Bi-M12-AP6X, nameščenima na obodu vstopnega cevovoda. Nameščeni sta zaporedno v isti ravnini. Dve sondi sta uporabljeni zato, da lahko določimo tudi smer vrtenja rotorja anemometra. Rotor anemometra je postavljen v vstopni cevovod na razdalji 1,5 $D_{v,cev}$ pred vstopom v rotor. Za določitev vrtilne frekvence rotorja anemometra je uporabljen univerzalni števec HP 5325B, ki registrira pulze prehodov anemometrskih rotorskih lopatic, iz časovne razlike obeh merilnih signalov z dveh zaporedno postavljenih sond pa lahko določimo smer vrtenja rotorja. Sama izvedba je optimirana tako, da je površina anemometra v smeri pretoka najmanjša.

blades is $D_{s,anem}$ = 0.25 m. The blades height is 0.05 m, width 0.025 m and thickness <0.003 m. The impeller is statically and dynamically balanced. At the top of the blades is placed the metal plate that serves as the signal producer for two serial placed inductive probes (TURCK Bi-M12-AP6X) on the intake pipe wall near the fan impeller entrance. The probes are placed in the same plane. Two probes are used for the impeller rotation direction determination. The anemometer impeller is placed in the intake pipe at a distance of 1.5 $D_{v,cev}$ in front of the fan impeller aye. A HP 5325B universal counter is used for the anemometer impeller speed. From the time difference of the measuring signals from both probes the direction of rotation is determined. The anemometer is optimised so the surface area of the blades in the flow direction is a minimum.

2.2 Merilni rezultati

Meritve so izvedene pri različnih vrtilnih frekvencah radialnega rotorja ventilatorja nespremenljive širine z razmerjem premerov D_2/D_1 = 1,85. Rezultati so podani v brezdimenzijski obliki s prerotacijskim koeficientom, vezanim na vrtilno frekvenco na vstopnem premeru (obodna hitrost na vstopnem premeru):

2.2 Measuring results

The measurements are performed at different speeds of the fan impeller, which has the constant width and a diameter ratio D_2/D_1 = 1.85. The results are given in non-dimensional form by using the prerotation coefficient, determined by the rotating speed at the entrance diameter (the circumferential velocity at the entrance diameter):

$$\xi_{pre} = \frac{\omega_{anem} D_{s,anem}}{\omega D_1} \qquad (26),$$

pri čemer pomeni pozitivna vrednost koeficienta smer vrtenja rotorja, negativni predznak pa smer vrtenja, ki je nasprotna smeri vrtenja rotorja. Tudi obratovalni pretok je podan v brezdimenzijski obliki s parametrom (specifičnim pretokom):

where the positive value of the coefficient is the same as the direction of the impeller. The negative sign represents the direction which is in opposition to the impeller rotating direction. In the non-dimensional form, with the capacity coefficient, the operating capacity (specific capacity) is also given by:

$$\xi_Q = \frac{Q}{nD_2^3} \qquad (27).$$

Prikazani so rezultatu izvedenih meritev pri treh različnih vrtilnih frekvencah rotorja radialnega ventilatorja (n = 1800, 1600 in 1400 min^{-1}). Pri vseh treh vrtilnih frekvencah je razvidna sprememba smeri prerotacijskega toka, in to že precej pred optimalnim obratovalnim režimom, kakor tudi pred preračunsko točko (sl. 8). To kaže na dejstvo, da se prerotacijski tok preusmeri hitreje kakor to izhaja iz Eulerjevih vstopnih trikotnikov (sl. 3). Najverjetneje zaradi tega, ker tok na vstopu v rotorske kanale ne sledi kotu rotorske lopatice, kar se izravna s hitrejšo preusmeritvijo toka oz. z ustvarjeno komponento absolutne hitrosti toka v obodni smeri. To je lahko posledica ustvarjenega sekundarnega toka na vstopu v rotor, ki tvori zastojna mesta (recirkulacija toka) ob vstopnem robu rotorske lopatice.

Pri obratovanju ventilatorja z dodajanjem dodatnega toka na vstopu v rotor ob vstopnem

The results of measurements taken during three different impeller speeds (n = 1800, 1600 in 1400 rpm) are given. At all three impeller speeds the prerotation flow direction change is evident. The change of the prerotation appears before the optimum or design operating capacity (Figure 8). This proves that the prerotation flow is diverted faster than it is determined by Euler's entrance velocity triangles (Figure 3). Probably this is the result of the fact that the flow at the impeller entrance does not follow the blade angle that is compensated by faster flow divertion creating the flow velocity component in the circumference direction. This could be the result of the created secondary flow at the entrance of the impeller channels, by which the stagnation flow areas (flow recalculation) near the entrance edge of the impeller blades are created.

With the fan operating with additional flow at the impeller entrance ([16] and [17]), the prerotation

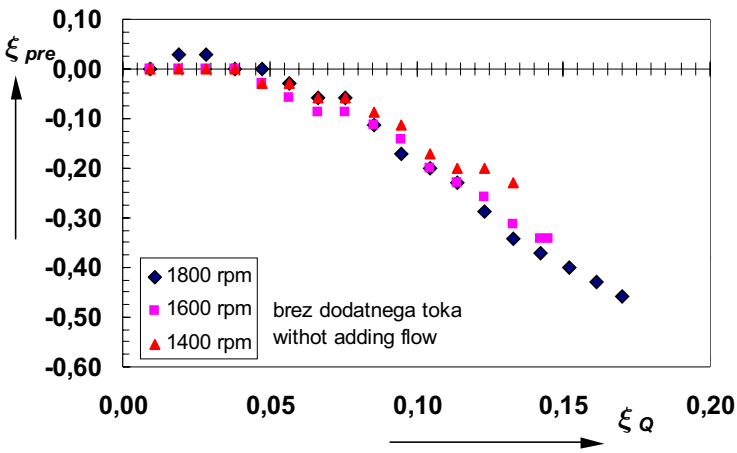

Sl. 8. *Merilni rezultati prerotacije toka v vstopnem cevovodu*
Fig. 8. *Measurement results of the prerotation flow in the entrance pipe*

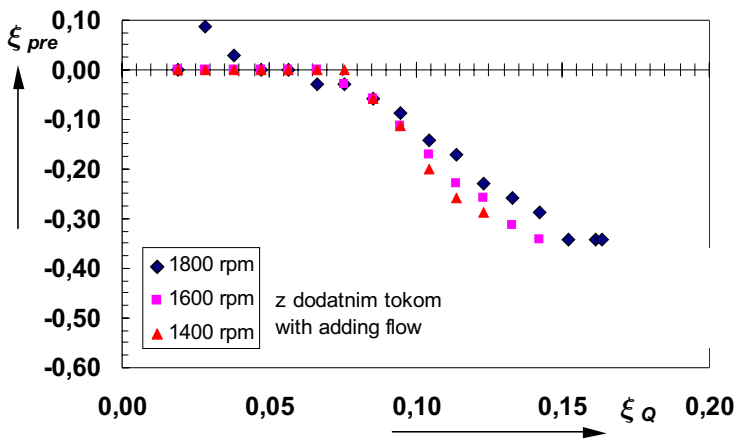

Sl. 9. *Merilni rezultati prerotacije toka v vstopnem cevovodu, z dodanim tokom na vstopu v rotor, na vstopnem premeru rotorja*
Fig. 9. *Measurement results of the prerotation flow in the entrance pipe by adding the additional flow at the impeller entrance diameter*

premeru ([16] in [17]) je prav tako opazna sprememba smeri prerotacijskega toka v področju manjših, pod optimalnih pretokov. Mesto spremembe smeri prerotacije toka se z večanjem vrtilne frekvence rotorja pomika v področje večjih obratovalnih pretokov. Glede obratovanja ventilatorja brez dodanega dodatnega toka na vstopu v rotor pa je opazno pojemanje prerotacijskega toka v področju večjih obratovalnih pretokov (sl. 9). Vzrok temu je najverjetneje razbitje ustvarjenega sekundarnega toka ob vstopnem robu rotorskih lopatic z dodanim tokom pri večjih obratovalnih pretokih (nad optimalnih). S tem se vpliv prerotacijskega toka v vstopnem cevovodu zmanjša in ne sega tako intenzivno do mesta merjenja, kjer je postavljen anemometer. To pomeni, da dodani tok na vstop radialnega rotorja prestavlja prerotacijski tok bliže rotorju, vendar pa še obstaja.

V primerjavi rezultatov pri obratovanju v obeh režimih (z dodanim tokom in brez njega na

flow direction change at the area of the smaller under-optimal capacities areas is also shown. The place of prerotation flow direction change is changed by the impeller speed increase in the direction of larger operating capacities. The difference between the fan operating without additional flow, added at the impeller entrance, compared to operating with added flow is that the magnitude of the prerotation flow decreases in the area of larger operating capacity (Figure 9). The reason for this is probably broken secondary flow that is created near the entrance blade edge at larger operating capacity (over-optimum capacities). In this way the prerotation flow influence in the intake pipe decreases and does not reach the place where the anemometer is placed in the intake pipe. According to this the added flow at the impeller entrance aye still exists but closer to the impeller entrance.

By comparing the results for both operating regimes (with and without additional flow at the impeller entrance) it is evident that the prerotation

vstopu v rotor) je razvidno, da je prerotacija toka močnejša pri obratovalnem režimu brez dodatnega toka na vstopu v rotor. Sprememba smeri se izvede kasneje, pri večjih obratovalnih pretokih kakor pri obratovanju brez dodanega toka na vstopu v rotor.

Glede na potek rezultatov meritev je opazen dokaj enotni potek oziroma majhen raztros merilnih rezultatov. Tudi glede na vrtilno frekvenco rotorja se merilni rezultati med seboj dobro ujemajo, tako da lahko sklepamo, da je sprememba prerotacije toka odvisna predvsem od pretoka in geometrijske oblike rotorja in manj od vrtilne frekvence rotorja.

Meritve so izvedene s petimi ponovitvami. Razvidna je visoka stopnja ponovljivosti meritev, zato lahko menimo, da je meritev ustrezna in napaka meritve reda nenatančnosti opreme, povezane v merilno verigo.

3 SKLEPI

Na podlagi izvedene analize pojava prerotacijskega toka v vstopnem cevovodu lahko povzamemo, da se prerotacijski tok pojavlja zaradi delovanja cirkulacijskih tokov v rotorskih kanalih in/ali okrog rotorskih lopatic, ki prek kapljevinskega trenja vplivajo na vrtinčnost toka v vstopnem cevovodu.

Prerotacijski tok spremeni smer rotacije zaradi spremembe smeri cirkulacijskega toka okrog rotorskih lopatic zaradi različnih kotov natekanja rotorskih lopatic na vstopnem premeru rotorja.

Pri manjših, podoptimalnih pretokih ima cirkulacijski tok okrog lopatice enako smer kakor cirkulacijski tok na izstopnem premeru rotorja, s čimer vpliva na povečanje energijske razlike, hkrati pa povzroča prerotacijo toka v smeri vrtenja rotorja. Vzrok nastanka takega cirkulacijskega toka je majhen natočni kot, ki povzroča odlepljanje toka na sesalni strani rotorske lopatice ob vstopnem robu.

Pri večjih, nadoptimalnih pretokih se slika spremeni zaradi večjih natekajočih kotov na rotorsko lopatico, ki povzročijo odlepljanje toka na tlačni strani ob vstopnem robu rotorske lopatice in s tem cirkulacijski tok okrog rotorske lopatice v smeri, ki je nasprotna smeri cirkulacijskega toka. Tako se dosežena energijska razlika rotorja zmanjšuje, v vstopnem cevovodu pa se pojavi prerotacijski tok s smerjo, nasprotno smeri vrtenja rotorja.

Jakost prerotacijskega toka je neposredno odvisna od jakosti cirkulacijskih tokov okrog rotorskih lopatic oziroma v rotorskih kanalih. Z večanjem pretoka se jakost prerotacijskega toka tudi veča.

Z ustreznim matematično-numeričnim postopkom se da ta pojav tudi ustrezno napovedati, kar pa so smernice za nadaljnje delo.

during the operation of the fan without additional flow at the impeller entrance is stronger than by operating with additional flow. The change of the prerotation flow direction appears later (in area of larger operating capacities) than by operating without added additional flow.

According to the results, the relative unified course and small measurement results scatter are evident. Even results of the impeller speed show a relatively unified course and disagreement between them is small. Because of this it can be concluded that the change of the prerotation flow depends on the capacity and impeller geometry and less on the impeller speed.

The measurements were repeated five times. Many repetitions show that the measurement is relevant and that the measurment uncertainty is the same as the uncertainly in the measuring chain.

3 CONCLUSIONS

According to the analyses of the prerotation flow in the entrance pipe it can be concluded that the prerotation flow appears as the result of the circulating flow activity in the impeller channels and/or around the impeller blades, which have (through the fluid friction) an influence on the whirl flow in the entrance pipe.

Prerotation flow changes its direction because of the prerotation direction change around the impeller blades, caused by different inlet angles of flow at the entrance rotor radii.

Circulation around the impeller blades has, at small (under optimal) capacities, the same direction as circulation at the outlet radii. As a result, it increases the energy difference and because of the small inlet angles causes separation of flow at the suction side of the blade inlet edge.

There are bigger inlet flow angles and separation at the pressure side of the blade edges at larger, over-optimum capacities and prerotation around the impeller blades therefore changes its direction into the opposite direction of circulation flow. This change of direction causes a smaller achieved energy difference and prerotation swirl in the opposite direction to the rotation direction.

The strength of the prerotation flow directly depends on the circulation flow intensity around the impeller blades or in the impeller channels. The prerotation flow increases with capacity increase.

The phenomenon can be predicted with suitable mathematical – numerical access which is the guideline for further investigations.

ZAHVALA

Avtorja se zahvaljujeta podjetju KLIMA Celje d.o.o in Ministrstvu za znanost in tehnologijo Republike Slovenije, ki so materialno in finančno podprli raziskave. Še prav posebej direktorju Norbertu Vrhovcu, Borisu Leskovšku in vsem preostalim, ki so kakorkoli sodelovali pri projektu.

ACKNOWLEDGMENT

The present field study was made possible by the understanding and support of KLIMA Celje Ltd. and the Ministry for Science and Technology of the Republic of Slovenia. The authors would like to express sincere thanks to them, and especially to Mr. Norbert Vrhovec, Mr. Boris Leskovšek and other collaborators.

4 SIMBOLI
4 SYMBOLS

cirkulacija	Γ	circulation
polje hitrosti	$\vec{v}$	velocity field
usmerjen element krivulje	$\vec{dl}$	oriented curve element
komponenta hitrosti v smeri osi x	v_x	velocity component in x direction
komponenta hitrosti v smeri osi y	v_y	velocity component in y direction
komponenta hitrosti v smeri osi z	v_z	velocity component in z direction
obodna komponenta hitrosti	v_t	circumferential velocity component
kot, med tangento in osjo x	α	angle between tangent and x axes
vstopni kot toka	α_1	entrance flow angle
obodna komponenta absolutne hitrosti na vstopnem premeru	c_{1u}	absolute entrance flow velocity in circumferential direction
obodna komponenta absolutne hitrosti na izstopnem premeru	c_{2u}	absolute discharge flow velocity in circumferential direction
obodna komponenta absolutne hitrosti na merilnem premeru	c_{3u}	absolute discharge flow velocity in circumferential direction on mesuring diameter
vstopni premer rotorja	D_1	impeller inlet diameter
izstopni premer rotorja	D_2	impeller exit diameter
merilni premer na izstopu iz rotorja	D_3	measuring impeller exit diameter
število rotorskih lopatic	z_r	number of the impeller blades
lopatična delitev na vstopnem premeru	t_1	blade division at the entrance diameter
lopatična delitev na izstopnem premeru	t_2	blade division at the exit diameter
relativna hitrost toka	w	relative flow velocity
relativna hitrost na sesalni strani lopatice	w_s	relative flow velocity on the suction side
relativna hitrost na tlačni strani lopatice	w_t	relative flow velocity on the pressure side
ločna dolžina lopatice	l_{lop}	blade curved length
izstopni kot rotorske lopatice	β_2	exit blade angle
širina rotorja	b	impeller width
tlačna razlika	Δp	pressure difference
polmer rotorja	r	impeller radii
vrtilni moment	M	torque
gostota	ρ	density
energijska razlika	Y_{th}	energy difference
gravitacijski pospešek	g	gravitation acceleration
črpalna višina	H_{th}	pump head
masni pretok	$\dot{m}$	mass flow rate
cirkulacija na vstopnem premeru	Γ_1	circulation at the inlet diameter
cirkulacija na izstopnem premeru	Γ_2	circulation at the exit diameter
cirkulacija v rotorskem kanalu	Γ_K	circulation in the impeller channel
cirkulacija okoli rotorske lopatice	Γ_L	circulation around the impeller blade
vstopni premer cevovoda	$D_{v,cev}$	entrance pipe diameter
srednji premer anemometra	$D_{s,anem}$	anemometer mean diameter
kotna hitrost rotorja	ω	impeller angular speed
kotna hitrost anemometra	ω_{anem}	anemometer angular speed
odpornostni moment ploskve	S	moment of surface resistance
brezdimenzijski prerotacijski koeficient	ξ_{pre}	dimensionless prerotational coefficient
brezdimenzijski koeficient pretoka	ξ_Q	dimensionless capacity coefficient
vrtilna frekvenca	n	impeller speed

5 LITERATURA
5 REFERENCES

[1] Stewart, C. B. (1909) Investigation of centrifugal pumps. *University of Wisconsin*, Bull. 318, p. 119.

[2] Stepanoff, A. J. (1993) Centrifugal and axial flow pumps, theory, design and application, 2nd Edition, *Krieger Publishing Company Malabar,* Florida.

[3] Schweiger, F. (1979) Tokovne in kavitacijske razmere pri delnih obremenitvah v centrifugalni črpalki. *Strojniški Vestnik, Ljubljana*.

[4] Siervo, F.(1980) Modern trends in selecting and designing reversibile Francis pump – turbines. *Water Power and Dam Construction*.

[5] Brennen, C. E. (1994) Hydrodynamics of pumps. *Oxford Science Publications, Oxford University Press, Concepts ETI, Inc.*

[6] Van den Braembusshe, R. A., B.M. Hände (1990) Experimental and theoretical study of the swirling flow in centrifugal compressor volutes. Transactions of ASME, *Journal of Turbomachinery,* Vol. 112.

[7] Sipos, G. (1991) Secondary flow and loss distribution in a radial compressor with untwisted backswept vanes. Transactions of ASME, *Journal of Turbomachinery,* Vol. 113.

[8] Mizuki, S., Y. Oosawa Y. (1992) Unsteady flow within centrifugal compressor channels under rotating stall and surge. Transactions of ASME, *Journal of Turbomachinery,* Vol. 114.

[9] Steiner, W., Fuchs, R., H. Starken (1992) Inlet flow angle determination of transonic compressor cascades. Transactions of ASME, *Journal of Turbomachinery*, Vol. 114.

[10] Predin, A. (1997) Prerotacijski tok v vstopnem cevovodu radialnih turbostrojev. *Kuhljevi dnevi'97,* Mokrice.

[11] Predin, A.(1998) Prerotacijski tok v vstopnem cevovodu radialnih turbostrojev – drugi del. *Kuhljevi dnevi'99*, Logarska dolina.

[12] Škerget, L.(1994) Mehanika tekočin. *Tehniška fakulteta - Univerza v Mariboru in Univerza v Ljubljani, Fakulteta za strojništvo.*

[13] Ecker, B., E. Schnell E.(1961) Axial- und Radial- Kompressoren. *Springer Verlag, Berlin Göttingen,* Heidelberg.

[14] Sigloch, H. (1993) Strömungsmaschinen, Grundlagen und Anwendungen. *Car Hanser Verlag München Wien.*

[15] Horvat, D. (1965) Vodene turbine. *Sveučilište u Zagrebu.*

[16] Predin, A.(1999) Vpliv sekundarnega toka na obratovalne karakteristike radialnega rotorja normalne širine. *Strojniški vestnik*, št. 1.

[17] Predin, A. (1997) Torsional vibrations at guide-vane shaft of pump-turbine model, Shock and Vibration. Vol. 4, *Issue 3*.

[18] Eck (1962) Ventilatoren, Vierte Auflage, *Springer Verlag*.

Naslov avtorjev: Doc.dr. Andrej Predin
Ignacijo Biluš
Fakulteta za strojništvo
Univerze v Mariboru
Smetanova 17
2000 Maribor

Author's Address: Doc.Dr. Andrej Predin
Ignacijo Biluš
Faculty of Mechanical Engineering
University of Maribor
Smetanova 17
2000 Maribor, Slovenia

Prejeto:
Received: 14.2.2000

Sprejeto:
Accepted: 2.6.2000